# New DMX³

## Efficient protection up to 4 000 A


AIR CIRCUIT BREAKERS | PRODUCT GUIDE

legrand®

# NEW DMX³ ACBs UP TO 4 000 A

## EFFICIENT PROTECTION AND CONTROL FOR ALL TYPE OF BUILDINGS

legrand

DMX³ AIR CIRCUIT BREAKERS


Electrical panel equipped with DPX MCCBs and modular MCBs up to 1 600 A
Main electrical panel equipped with DMX³ ACBs and DPX MCCBs up to 4 000 A
Thanks to DPX range of MCCBs and to DX MCBs you can benefit of the advantages of a complete protection system at any level of the installation


# Optimized performance up to 4 000 A

| DMX³ air circuit breakers and DMX³-I isolating switches are available in two frame sizes. Three breaking capacities for circuit breakers: 50 kA for the DMX³-N designation 65 kA for DMX³-H and 100 kA for DMX³-L.

| The range covers 8 rated currents, between 800 A and 4 000 A.

| All range of DMX³ air circuit breakers and DMX³-I isolating switches is available in fixed and draw-out version.

## BREAKING CAPACITIES AND RATED CURRENTS

| | 800 A | 1 000 A | 1 250 A | 1 600 A | 2 000 A | 2 500 A | 3 200 A | 4 000 A |
|---|---|---|---|---|---|---|---|---|
| **DMX³-N** | **50 kA** \| FIXED/DRAW-OUT | | | | | | | |
| **DMX³-H** | **65 kA** \| FIXED/DRAW-OUT | | | | | | | |
| **DMX³-L** | **100 kA** \| FIXED/DRAW-OUT | | | | | | | |

## OVERAL DIMENSIONS AND WEIGHT

**Fixed version**

| | | Height | Depth | Width | Weight |
|---|---|---|---|---|---|
| **FRAME 1:** DMX³-N 2500 DMX³-H 2500 | **3P** | 414 mm | 354 mm | 273 mm | 41 kg |
| | **4P** | 414 mm | 354 mm | 358 mm | 48 kg |
| **FRAME 2:** DMX³-L 2500 DMX³-N/H/L 4000 | **3P** | 414 mm | 354 mm | 396 mm | 59 kg |
| | **4P** | 414 mm | 354 mm | 526 mm | 76 kg |

**Draw-out version**

| | | Height | Depth | Width | Weight |
|---|---|---|---|---|---|
| **FRAME 1:** DMX³-N 2500 DMX³-H 2500 | **3P** | 465 mm | 433 mm | 316 mm | 77 kg |
| | **4P** | 465 mm | 433 mm | 401 mm | 94 kg |
| **FRAME 2:** DMX³-L 2500 DMX³-N/H/L 4000 | **3P** | 465 mm | 433 mm | 414 mm | 108 kg |
| | **4P** | 465 mm | 433 mm | 544 mm | 137 kg |

### LEGRAND ADVANTAGE

**The overal dimensions of the breaker contribute considerably to an efficient use of the space inside the electrical panel. The constant depth for all the rated currents facilitates connection of the busbars.**

### OTHER ELECTRICAL FEATURES

Rated operational voltage Ue: 690 Vac 50/60 Hz
Rated insulation voltage Ui: 1 000 Vac 50/60 Hz
Rated impulse withstand voltage Uimp: 12 kV
Category of use: B

Ambient temperature: -5 °C to 70 °C
Humidity: + 55 °C with relative humidity of 95%, conforms to IEC 68-2-30


# Precise & user friendly LCD tripping units

Besides their easy mounting and connection, strength and good continuity of operation, 3 types of electronic units allow precise adjustment of different limits for current values and time delay. The result is an efficient protection against electrical faults while maintaining total discrimination with downstream breakers.

The LCD display lets you monitor the measured current values and informs you on fault adjustement and log (the cause of last trip and maintenance operations).

## MP4 LI ELECTRONIC PROTECTION UNIT CAT. N° 288 00

**The following settings are adjusted using rotary selector switches:**

- Long time delay protection against overloads: **Ir**
- Long delay protection operation time: **tr**
- Short time delay protection against short circuits: **Im**
- Neutral protection: **IN**

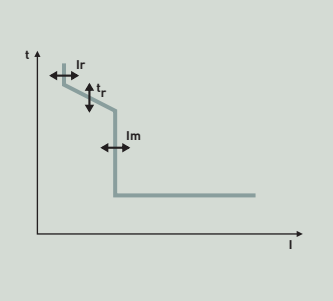


## MP4 LSI ELECTRONIC PROTECTION UNIT CAT. N° 288 01

**The following settings are adjusted using rotary selector switches:**

- Long time delay protection against overloads: **Ir**
- Long delay protection operation time: **tr**
- Short time delay protection against short circuits: **Im**
- Short time delay protection operation time: **tm**
- Instantaneous protection against very high short circuits: **Ii**
- Neutral protection: **IN**

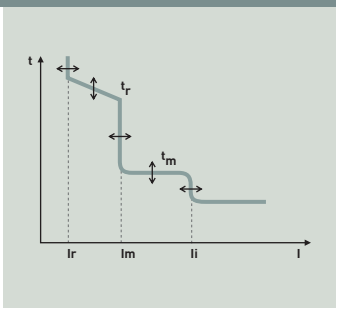


## MP4 LSIg ELECTRONIC PROTECTION UNIT CAT. N° 288 02

**The following settings are adjusted using rotary selector switches:**

- Long time delay protection against overloads: **Ir**
- Long delay protection operation time: **tr**
- Short time delay protection against short circuits: **Im**
- Short time delay protection operation time: **tm**
- Instantaneous protection against very high short circuits: **Ii**
- Earth fault current: **Ig**
- Time delay on earth fault tripping: **tg**
- Neutral protection: **IN**

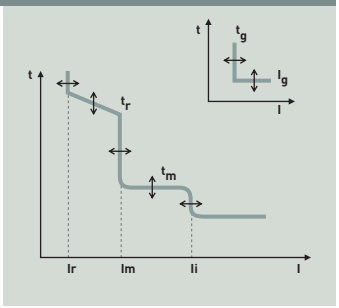


### LEGRAND ADVANTAGE

**All protection units are equipped with batteries so you can monitor the parameters even when the breaker is not connected.**

### INFORMATION

All DMX³ breakers are factory equipped with any MP4 protection unit LI, LSI or LSIg according to your requirements. You just need to select and indicate the 2 catalogue numbers when placing the order (1 for the breaker and 1 for the tripping unit).


# Fast clipping control accessories

| You can remotely control the DMX³ thanks to its range of accessories: shunt trips, undervoltage releases, motor operators and closing coils.

| All the control accessories are simply clipped on to the front panel of the circuit breaker, which is especially configured in order to facilitate the clipping.

| Every type of accessory is compatible with its own location, in order to avoid any possible mistake.

**All control accessories can be easily installed without any special tool and in a very short time. The installation is to be done on the front panel of the air circuit breaker. In that way, the separation between power and control circuits is guaranteed.**

## SHUNT TRIP

Shunt trips are devices used for the remote instantaneous opening of the air circuit breaker. They are generally controlled trough an N/O type contact. The actual offer of shunt trips proposes different supply voltages (from 24 V to 415 V), compatibles with AC and DC currents. The shunt trips are already equipped with a special fast connector, to be directly inserted into auxiliary contacts block. An auxiliary contact is connected in series with the coil, cutting off its power supply when the main poles are open.

**Technical characteristics:**
- Nominal voltage Un: 24 V∿/⎓; 48 V∿/⎓; 110 V∿/⎓; 220 V∿/⎓; 415 V∿
- Tolerance on nominal voltage: 70 to 110% Vn
- Maximum power consumption (max.power for 180 ms): 500 VA∿/500 W ⎓
- Continuous power: 5 VA∿/5 W ⎓
- Maximum opening time: 30 ms
- Insulation voltage: 2500 V 50 Hz for 1min
- Endurance on pulse: surge proof 4 kV 1.2/50 µs

## UNDERVOLTAGE RELEASE

Undervoltage releases are devices which are generally controlled by an N/C type contact. The trigger instantaneous opening of the circuit breaker if their supply voltage drops below a certain threshold and in particular if the control contact opens. These releases are equipped with a device for limiting their consumption after the circuit has been closed.

**Technical characteristics:**
- Nominal voltage Un: 24 V∿/⎓; 48 V∿/⎓; 110 V∿/⎓; 220 V∿/⎓; 415 V∿
- Tolerance on nominal voltage: 85 to 110% Vn
- Maximum power consumption (max.power for 180 ms): 500 VA∿/500 W ⎓
- Continuous power: 5 VA∿/5 W ⎓
- Opening time: 60 ms
- Insulation voltage: 2500 V 50 Hz for 1min
- Endurance on pulse: surge proof 4 kV 1.2/50 µs

## CLOSING COILS

These coils are used for remotely controlling the closing of the power contacts of the circuit breaker. The springs of the circuit breaker are to be loaded prior to the action of the closing coils. They are controlled by an N/O type contact.

**Technical characteristics:**
- Nominal voltage Un: 24 V∿/⎓; 48 V∿/⎓; 110 V∿/⎓; 220 V∿/⎓; 415 V∿
- Tolerance on nominal voltage: 70 to 110% Vn
- Maximum power consumption (max.power for 180 ms): 500 VA∿/500 W ⎓
- Continuous power: 5 VA∿/5 W ⎓
- Maximum closing time: 50 ms
- Insulation voltage: 2500 V 50 Hz for 1min
- Endurance on pulse: surge proof 4 kV 1.2/50 µs

### LEGRAND ADVANTAGE

**Electrical connection is made in no time thanks to the fast connector supplied on all above accessories.**

### NUMBER OF CONTROL AUXILIARIES FOR DMX³ = 3

Shunt trip: 1
Undervoltage release: 1
Closing coils: 1

## MOTOR OPERATORS

Motor operators, are used for remotely reloading the springs of the circuit breaker mechanism immediately after the device closes. The device can thus be re-closed almost immediately after an opening operation.
To motorise a DMX³ it is necessary to add a release coil (undervoltage release or shunt trip) and a closing coil.
If the supply voltage of the controls fails, it is still possible to reload the springs manually. Motor-driven controls have "limit switch" contacts which cut off the power supply of their motor after the springs have been reloaded. Motor operators are easy to mount, with only three screws.

**Technical characteristics:**
- Nominal voltage Un: 24 V∿/⎓, 48 V∿/⎓, 110 V∿/⎓, 230 V∿/⎓ , 415 V∿
- Tolerance on nominal voltage: 85 to 110% Vn
- Spring reloading time: 5s
- Maximum power consumption: 140 VA∿/140 W ⎓
- Starting current: 2 up to 3 In 0.1 s
- Maximum cycle: 2/min

## SAFETY AND PADLOCKING ACCESSORIES FOR AN INCREASED SECURITY

The DMX³ circuit breakers draw-out types are delivered as standard with safety padlocking shutters preventing access to live terminals. They have a number of other safety devices, such as:
- Key-operated locks:
Main contacts open
Circuit breaker in draw-out position
- Padlocks for:
Main contacts open
Contact shutters closed (for draw-out position)
- Door locking in order to prevent the opening of the electrical switchboard door when the contacts of the ACB are closed.

Fixed version equipped with padlocking system

Draw-out version equipped with key-operated locks

# Easy identification of control accessories

Electrical auxiliaries are connected on the front panel on terminal blocks provided for this purpose. Accessories are identified on the front panel.

As the cover has window, it is easy to ascertain, which devices are fitted on the circuit breaker.

## SIGNALLING CONTACTS

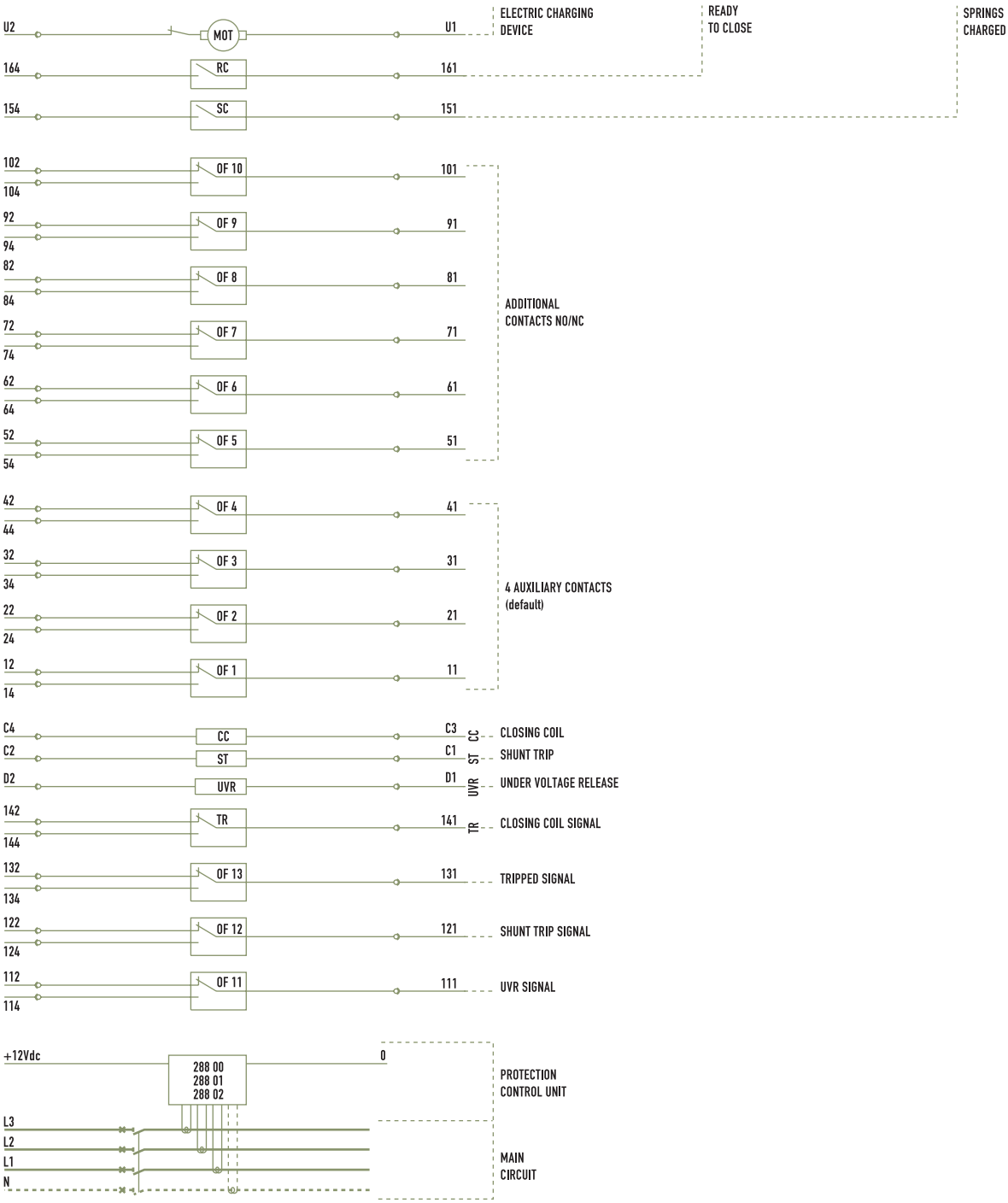


### NUMBER OF AUXILIARY CONTACTS FOR DMX³ = 10

4 auxiliary contacts as standard (NO/NC)
6 additional auxiliary contacts (NO/NC)

## FIXED VERSION-CHOOSE YOUR CONNECTION ACCESSORIES: 3 POSSIBILITIES

The type of rear terminals
can be easily changed according to your needs.

The breaker is supplied with rear terminals for horizontal connection

### REAR TERMINALS FOR FLAT CONNECTION

**Frame 1:**
3P: Cat. N°. 288 84
4P: Cat. N°. 288 85

**Frame 2:**
3P: Cat. N°. 288 92
4P: Cat. N°. 288 93

### REAR TERMINALS FOR VERTICAL CONNECTION

This type of connection uses 2 accessories:
the previous rear terminals for flat connection,
which must be equipped with the vertical ones.

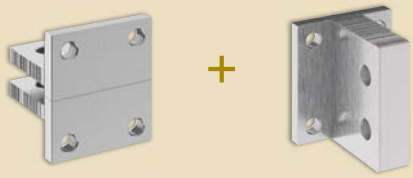

**Frame 1:**
3P: Cat. N°. 288 84 + Cat. N°. 288 82
4P: Cat. N°. 288 85 + Cat. N°. 288 83

### SPREADERS

For any situation requiring a bigger width
for a safe connection (i.e. aluminium bus bars).

**Frame 1:**
3 types of accessories
- For flat connection
3P: Cat. N°. 288 86
4P: Cat. N°. 288 87
- For vertical connection
3P: Cat. N°. 288 88
4P: Cat. N°. 288 89
- For horizontal connection
3P: Cat. N°. 288 90
4P: Cat. N°. 288 91

# Connection: maximum adaptability

- The fixed version of DMX³ is equipped with rear terminals for horizontal connection with bars.
- You can change connection type according to your needs.

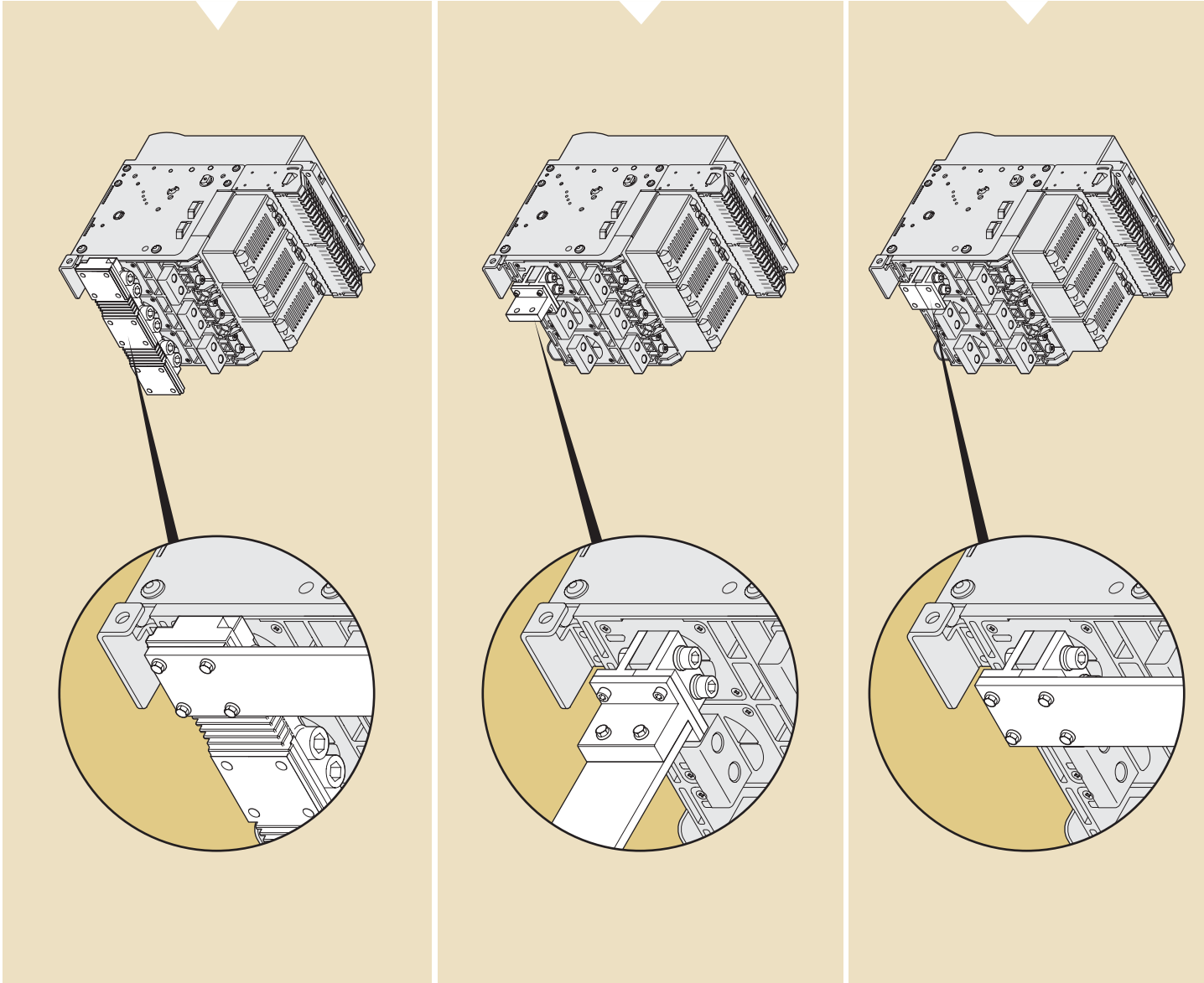

## DRAW-OUT VERSION-CHOOSE YOUR CONNECTION ACCESSORIES

Draw-out version of the DMX³ breakers is supplied with rear terminals for flat connection with bars. You can easily transform those terminals into vertical or horizontal type by using the unique reversible connector.

**2 TYPES OF FIXING**
Reversible connector for vertical or ...

... horizontal connection.

**Frame 1:**
3P: Cat. N°. 288 96
4P: Cat. N°. 288 97

**Frame 2:**
3P: Cat. N°. 288 94
4P: Cat. N°. 288 95

The breaker is supplied with rear terminals for flat connection

**FLAT CONNECTION USING THE REAR TERMINALS OF THE BREAKER**

# Connection: maximum adaptability (continued)

The draw-out version is equipped with rear terminals for flat connection with bars.

## DRAW-OUT VERSION: EXAMPLES OF CONNECTIONS

Draw-out version of the DMX³ breakers is supplied with rear terminals for flat connection with bars.
You can easily transform those terminals into vertical or horizontal type by using the unique reversible connector.

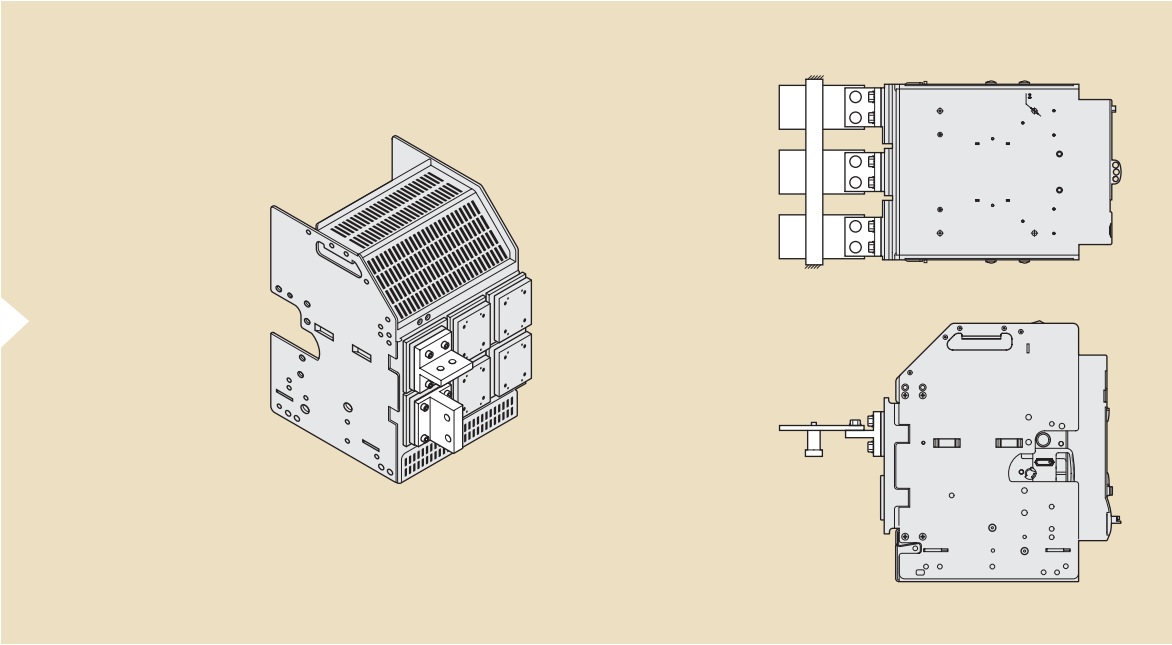

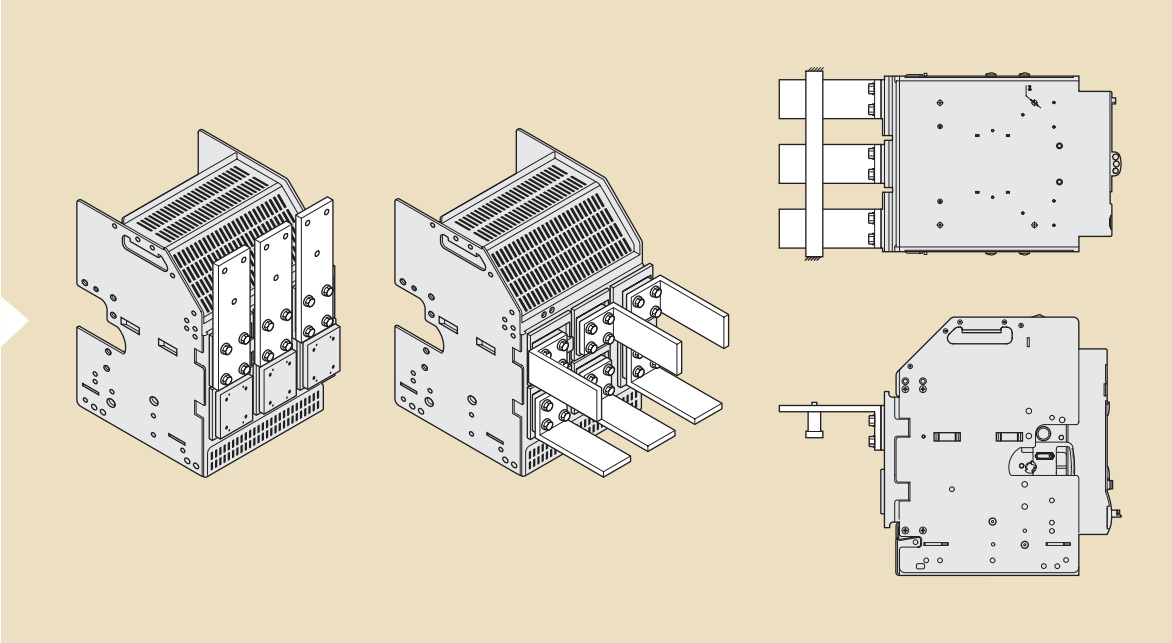

### CONNECTIONS: A FEW RECOMMENDATIONS !

Connections provide the electrical connection of equipment and are also responsible for a considerable proportion of their heat dissipation.
Connections must never be under-sized.
Plates or terminals must be used over a maximum area.
Heat dissipation is encouraged by arranging the bars vertically. If an uneven number of bars is connected, place the higher number of bars on the upper part of the terminal.
Avoid bars running side by side: this causes poor heat dissipation and vibrations.
Place spacers between the bars to maintain a distance between them which is at least equivalent to their thickness.

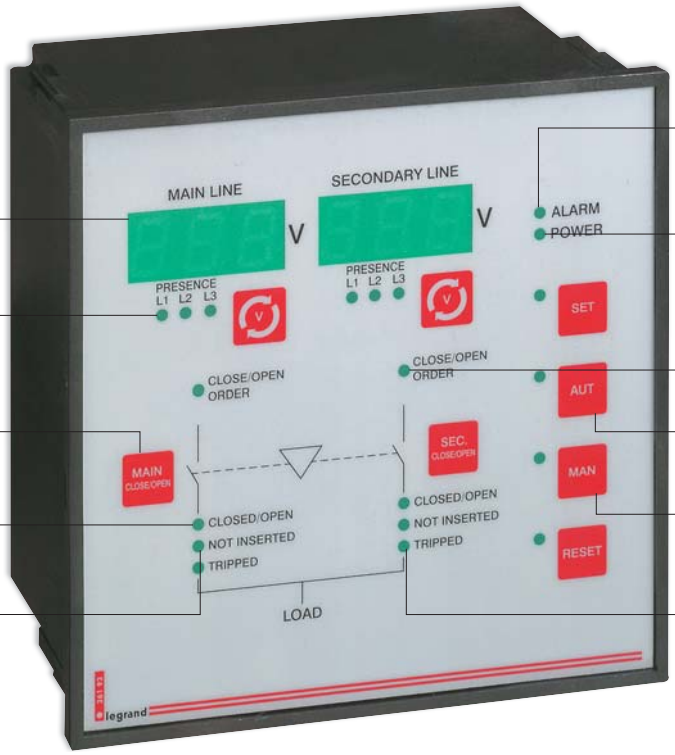


# Continuity of service and increased safety

Supply invertors answer the double need of continuity of service and greater safety (security). Traditionally used in hospitals, public buildings, industries with continuous manufacturing processes, airports and military applications, supply invertors become increasingly required for new applications such as telecommunications and computing treatment or in the management of energy sources, notably those say "renewable energies".

## AUTOMATIC SUPPLY INVERTORS

All DMX³ air circuit breakers (fixed and draw-out version) can be fitted with an interlocking system which guarantees "mechanical safety" in the event of supply inversion. Interlocking is achieved using a cable system and interlocking units mounted on each circuit breaker.
Every circuit breaker composing the supply invertor must be equipped with one interlocking unit.
This system allows devices of different sizes and types (3P, 4P, fixed, draw-out) to be interlocked. DMX³ devices can be installed in different configurations inside the enclosure.
This mechanical interlocking system can be supplemented by motorised operators and an automation control unit making the invertor fully automatic.
The Legrand automatic control unit Cat.N° 261 93 allows to easily manage the automatic switching of two sources.
Controlled by a microprocessor, the unit is fully programmable.
All the parameters are adjustable: values of the thresholds of tension, temporization between switching, starting up of a generator ...

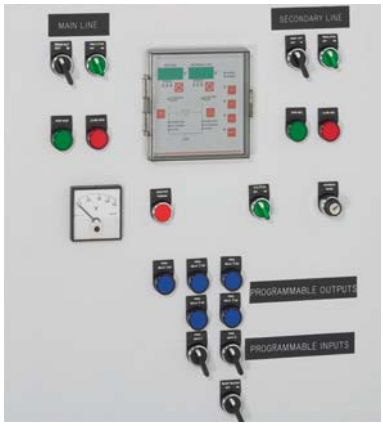


**Control panel of a supply invertor with automation control unit Cat. N° 261 93**

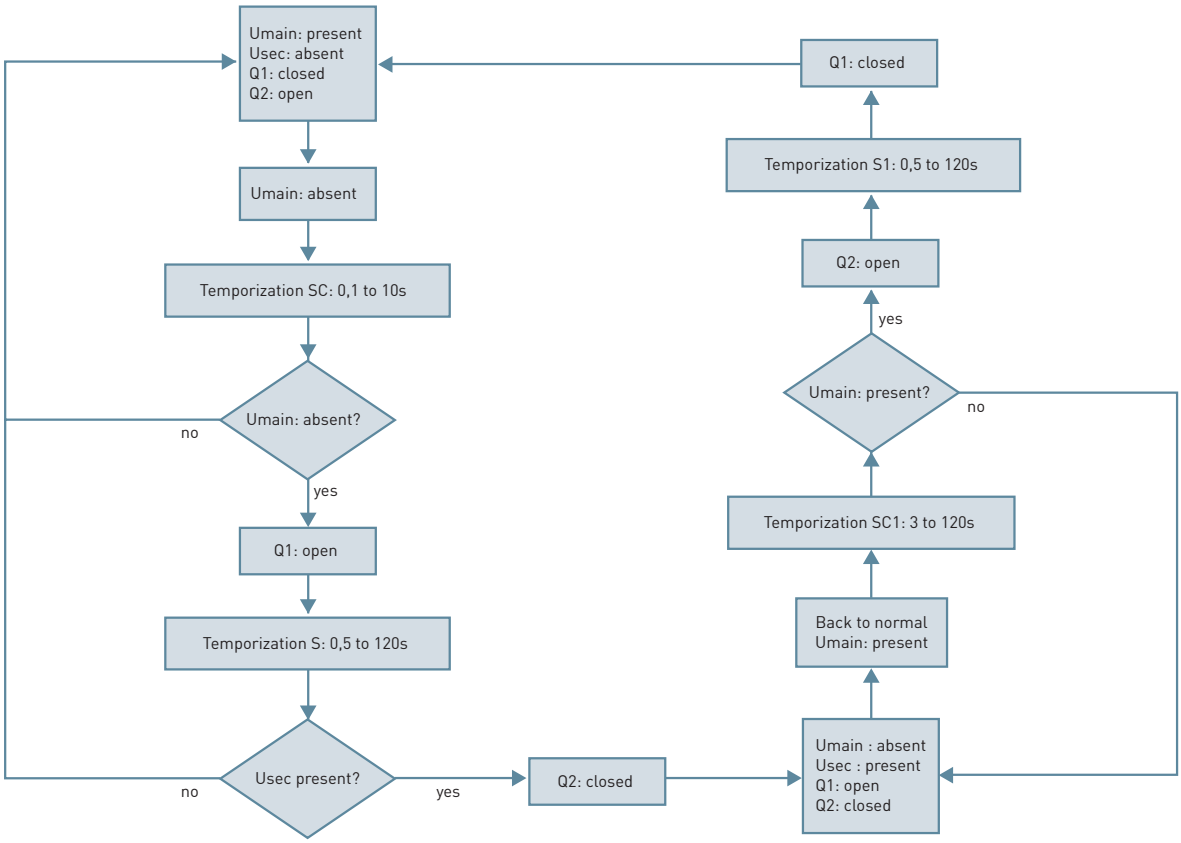


**Example of algorithm for the functioning of an automatic supply invertor**

### LEGRAND ADVANTAGE

**Thanks to its digital displays and different LEDs is possible to watch permanently the state of the invertor, as well as the presence and the value of the voltage on each power supply.**

## STAND-BY POWER SUPPLY (WITHOUT LOAD SHEDDING)

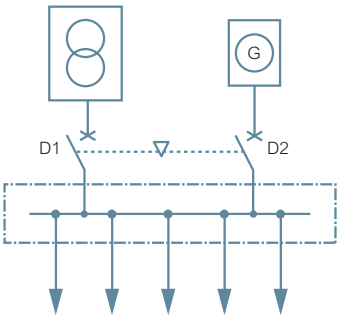


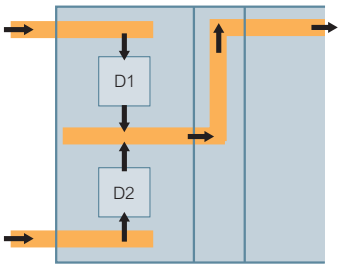


The two DMX³ devices (D1 and D2) are connected to a central common busbar. Since they are not simultaneously on-load, they can be in the same enclosure.

## STAND-BY POWER SUPPLY (WITH LOAD SHEDDING)

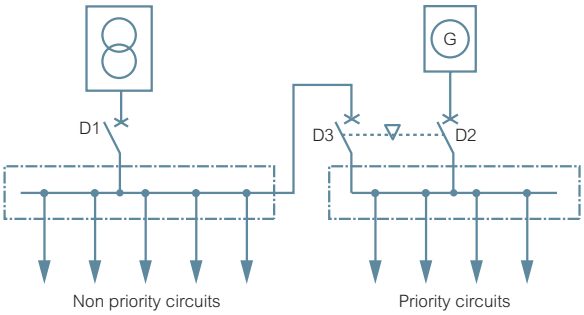


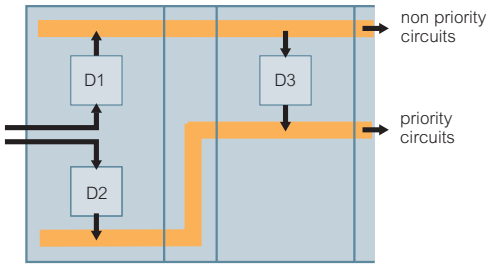


The two DMX³ devices (D1 and D2) are not on-load simultaneously and can therefore be installed in the same enclosure. D3 can be on-load at the same time as D1, and must be installed in another enclosure.

# Flexible configurations
## (Examples of supply invertors)

Supply invertor assures the following functions:
- Switching between a main source and a secondary source in order to supply the circuits requiring continuous service (for safety reasons) or for energy saving purpose (when the secondary source is different from the network).
- Management of the functioning of the secondary source (power generator) supplying the safety circuits.

## DUAL POWER SUPPLY (TOTAL POWER)

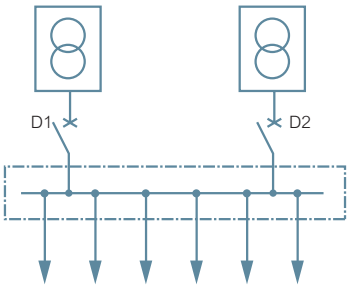


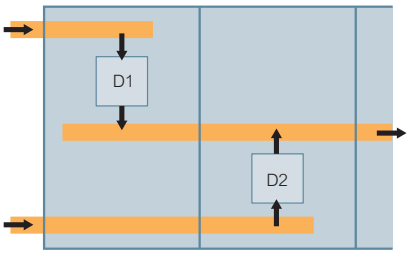


The two DMX³ devices (D1 and D2) draw current on a common busbar. They can only be installed in the same enclosure if the sum of their currents does not exceed the permissible value for the recommended size.

## DUAL POWER SUPPLY (REDUCED POWER WITH PRIORITY LOADS)

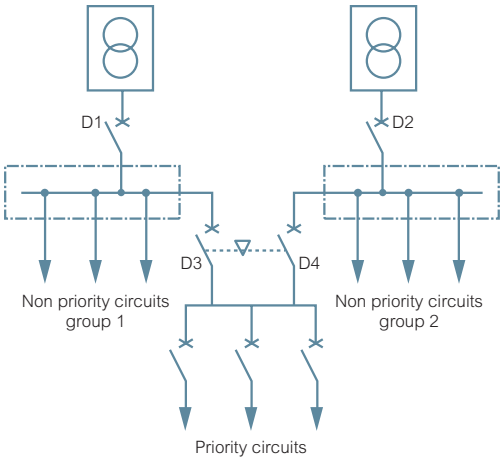


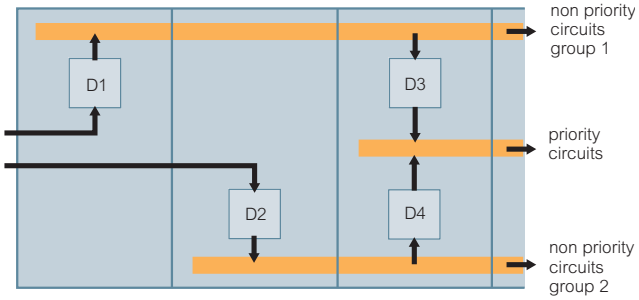


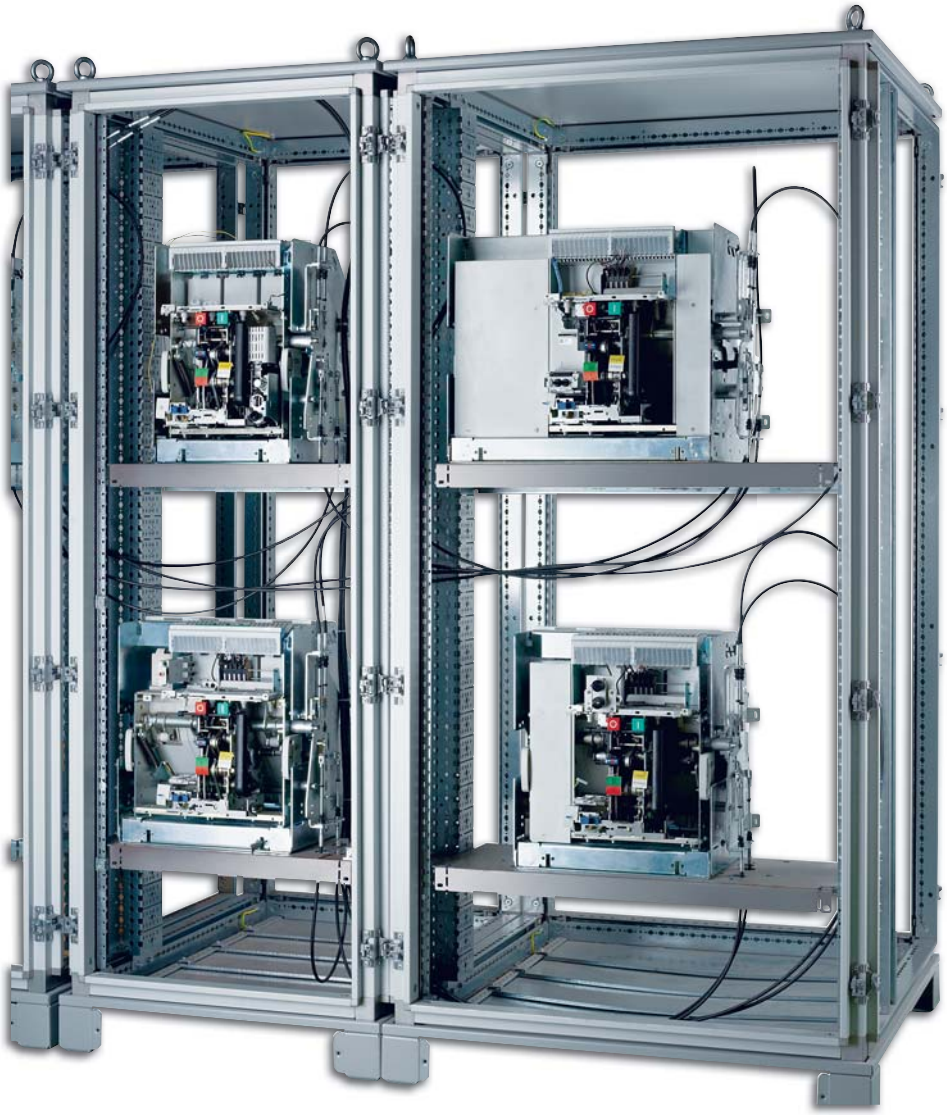

# Flexible configurations

## (Examples of supply invertors) (continued)

| DMX³ and DMX³-I devices can be fitted with an interlocking mechanism which guarantees "mechanical safety" in the event of supply inversion.

| Interlocking is achieved using interlocking units mounted on the side of the devices and a cable system.

## MECHANICAL INTERLOCK FOR 2 CIRCUIT BREAKERS

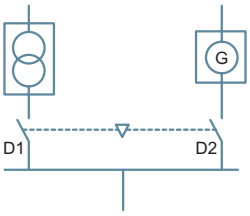


D1 is used for the main power supply of the installation (normal functioning), D2 for emergency power supply via power generator (in case of mains fault). For this configuration the two breakers can be simultaneously open, but can not be closed in the same time.

| D1 | D2 |
|---|---|
| 0 | 0 |
| 1 | 0 |
| 0 | 1 |

0 = circuit breaker is open
1 = circuit breaker is closed

## MECHANICAL INTERLOCK FOR 3 CIRCUIT BREAKERS

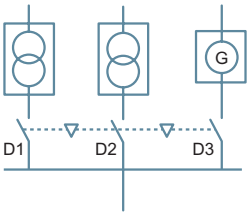


The three DMX³ circuit breakers are connected to one common busbar. D1 and D2 breakers are supplying the energy from two different power transformers and D3 from a power generator (in case of emergency). For this configuration all the three breakers can be simultaneously open. At any time, only one single circuit breaker can be on-load. The following table presents all possible combinations of mechanical interlock of the 3 breakers.

| D1 | D2 | D3 |
|---|---|---|
| 0 | 0 | 0 |
| 1 | 0 | 0 |
| 0 | 1 | 0 |
| 0 | 0 | 1 |

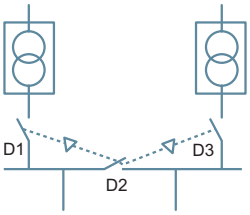


The following example presents three circuit breakers with double mechanical interlock for D2 circuit breaker. D1 and D3 breakers are supplying the electricity form 2 power transformers. There are 6 interlocking combinations possible.

| D1 | D2 | D3 |
|---|---|---|
| 0 | 0 | 0 |
| 1 | 0 | 0 |
| 0 | 0 | 1 |
| 0 | 1 | 0 |
| 1 | 1 | 0 |
| 0 | 1 | 1 |
| 1 | 0 | 1 |

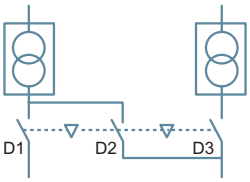


The following example presents three circuit breakers with double mechanical interlock for D2 circuit breaker. It is a possible version of the previous scheme, presenting four combinations. D1 and D3 breakers supply energy for independent circuits. D2 breaker is used in case of emergency for priority circuits.

| D1 | D2 | D3 |
|---|---|---|
| 0 | 0 | 0 |
| 1 | 0 | 0 |
| 0 | 0 | 1 |
| 1 | 0 | 1 |
| 0 | 1 | 0 |

0 = circuit breaker is open
1 = circuit breaker is closed

### INFORMATION

This system allows devices of different sizes and types to be interlocked.
The cable system provides the flexibility to install DMX³ devices in a vertical configuration in the same enclosure or in a horizontal configuration in different columns.

Mechanical interlock device

Cable for mechanical interlock

# Easy to install mechanical interlock system

## (The choice of cable for mechanical interlock)

- Mechanical interlock is set up using cables and a mechanical interlock device and can interlock 2 or 3 devices, which may be different type in a vertical or horizontal configuration.
- The interlock device is mounted on the right-hand side of the air circuit breaker.

## CABLE LENGTH SELECTION TABLE

| Length (mm) | Type | Cat. N° |
|---|---|---|
| 2 600 | 1 | **289 20** |
| 3 000 | 2 | **289 21** |
| 3 600 | 3 | **289 22** |
| 4 000 | 4 | **289 23** |
| 4 600 | 5 | **289 24** |
| 5 600 | 6 | **289 25** |

## 2 DMX³ – HORIZONTAL CONFIGURATION

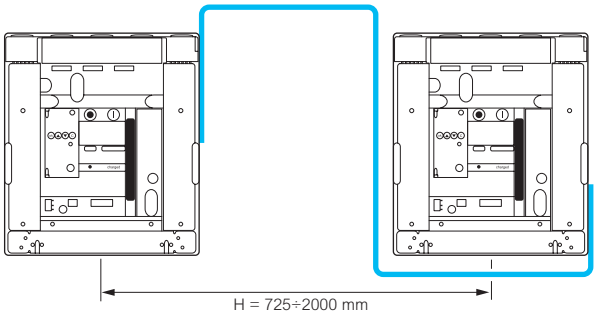


**Required cable length:**
**L = 1430 + H**

## 2 DMX³ - VERTICAL CONFIGURATION

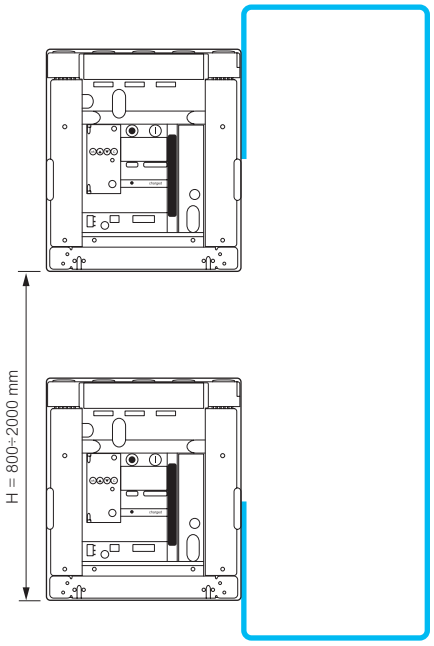


**Required cable length:**
**L = 1570 + V**

## 3 DMX³ - VERTICAL + HORIZONTAL CONFIGURATION

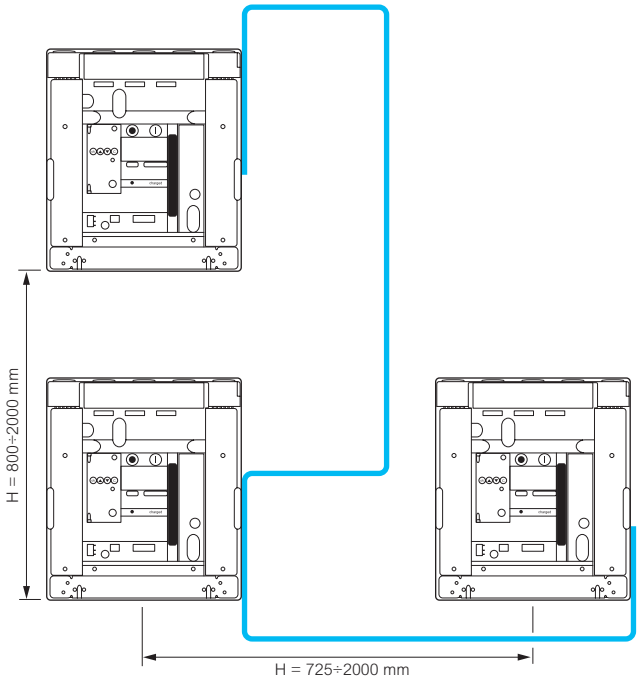


**Required cable length:**
**L = 1430 + V + H**

## EXAMPLES FOR 3 AIR CIRCUIT BREAKERS

| Distance between air circuit breakers (mm) | | Horizontal | | | |
|---|---|---|---|---|---|
| | | 725 mm | 1 000 mm | 1 450 mm | 2 000 mm |
| Vertical | 800 mm | Type 2 | Type 3 | Type 4 | Type 5 |
| | 1 000 mm | Type 3 | Type 3 | Type 4 | Type 5 |
| | 1 600 mm | Type 4 | Type 5 | Type 5 | Type 6 |
| | 2 000 mm | Type 5 | Type 5 | Type 6 | Type 6 |

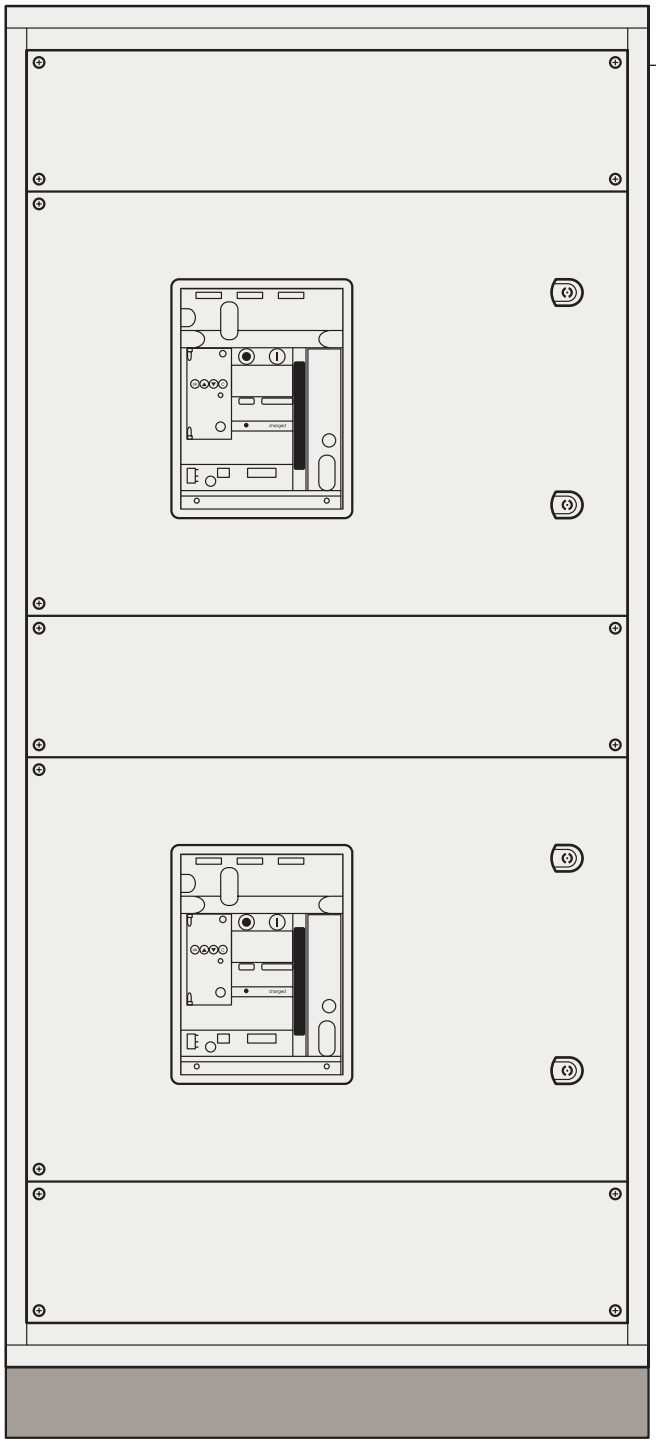

XL³ 4000:
width 600 or 850 mm

# Be free to choose XL³ fully adaptable enclosure

| It is very easy to create the configuration you want thanks to the different available sizes of XL³ 4000 enclosures: 2 widths, 3 depths, and 2 heights.

| A full range of accessories, such as dedicated fixing plates and faceplates, facilitates the integration of DMX³ devices inside XL³ enclosures.

## INTEGRATION INTO XL³ 4000 ENCLOSURES

| | FRAME 1<br>DMX³ 2500 | | FRAME 2<br>DMX³ 2500 AND DMX³ 4000 | |
|---|---|---|---|---|
| | 3P | 4P | 3P | 4P[1] |
| | FIXED OR DRAW-OUT | | FIXED OR DRAW-OUT | |
| XL³ 4000<br>24 MODULES<br>USABLE WIDTH<br>600 MM | 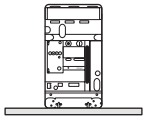 | 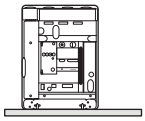 | 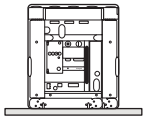 | 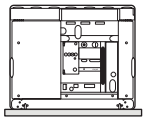 |
| | **Depth of enclosures:<br>725 or 975 mm** | | **Depth of enclosures:<br>725 or 975 mm up to 2 500 A<br>975 mm up to 4 000 A** | |

[1] Except supply invertors

| | FRAME 1<br>DMX³ 2500 | | FRAME 2<br>DMX³ 2500 AND DMX³ 4000 | |
|---|---|---|---|---|
| | 3P | 4P | 3P | 4P |
| | FIXED OR DRAW-OUT | | FIXED OR DRAW-OUT | |
| XL³ 4000<br>36 MODULES<br>USABLE WIDTH<br>850 MM | 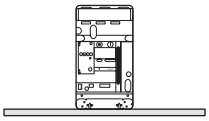 | 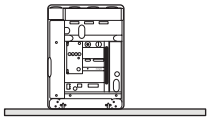 | 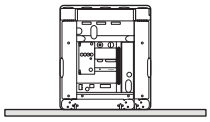 | 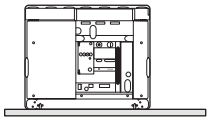 |
| | **Depth of enclosures:<br>725 or 975 mm** | | **Depth of enclosures:<br>725 or 975 mm up to 2 500 A<br>975 mm up to 4 000 A** | |

**LEGRAND ADVANTAGE**

Optimized space and reduced width of main distribution board:
XL³ 4000 – 600 mm width enclosures can be equipped with frame 2 air circuit breakers thanks to their compact size.

The correct size for the enclosure, and thus the power to be dissipated, is obtained by adapting the depth of the assembly:
- 725 mm min. up to 2 500 A
- 975 mm min. up to 4 000 A

## DMX³ FIXED VERSION

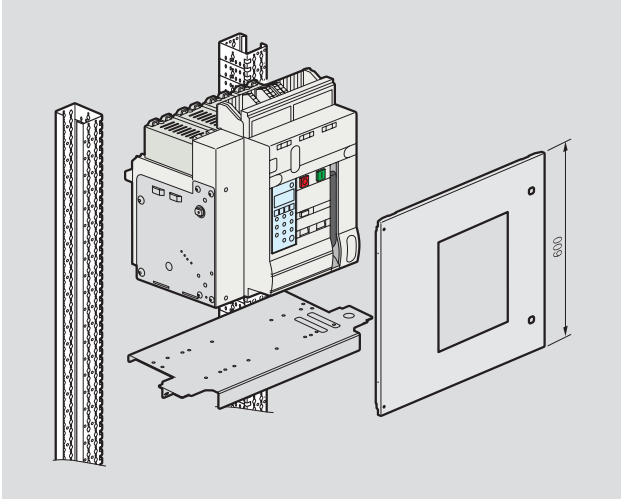


## DMX³ DRAW-OUT VERSION


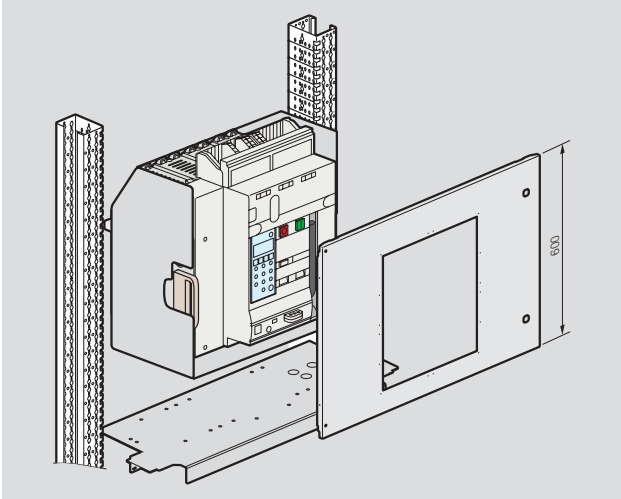


# Be free to choose XL³ fully adaptable enclosure (continued)

| DMX³ circuit breakers and switches are mounted on horizontal plates.

| Four different plates are available for fixed version or draw-out version of the breaker and for 24 modules (width 600 mm) and 36 modules (width 850 mm) XL³ 4000 enclosures. They consist of a horizontal plate and a strengthening crosspiece.

## FIXING PLATES SELECTION CHART

DMX³ devices are placed on the plate and fixed using screws and nuts.
The use of lifting equipment is strongly recommended for placing DMX³ devices on the plate.

| Version | | DMX³ fixed version | | DMX³ draw-out version | |
|---|---|---|---|---|---|
| XL³ 4000 enclosure type | | 24 modules (600 mm width) | 36 modules (850 mm width) | 24 modules (600 mm width) | 36 modules (850 mm width) |
| DMX³ - N 2500<br>DMX³ - H 2500<br>DMX³ - L 2500<br>DMX³ - I 2500 | 3P | 207 51 | 207 52 | 207 53 | 207 54 |
| | 4P | | | | |
| DMX³ - N 4000<br>DMX³ - H 4000<br>DMX³ - L 4000<br>DMX³ - I 4000 | 3P | | | | |
| | 4P | | | | |

## FACEPLATES SELECTION CHART

All XL³ 4000 metallic faceplates are equipped with hinges and locks in order to facilitate installation and maintenance operations.

| Version | | DMX³ fixed version | | DMX³ draw-out version | |
|---|---|---|---|---|---|
| XL³ 4000 enclosure type | | 24 modules (600 mm width) | 36 modules (850 mm width) | 24 modules (600 mm width) | 36 modules (850 mm width) |
| DMX³ - N 2500<br>DMX³ - H 2500<br>DMX³ - I 2500 | 3P | 209 38 | 209 48 | 209 38 | 209 48 |
| | 4P | | | | |
| DMX³ - L 2500 | 3P | 209 38 | | 209 38 | |
| | 4P | 209 39 | | 209 39 | |
| DMX³ - N 4000<br>DMX³ - H 4000<br>DMX³ - L 4000<br>DMX³ - I 4000 | 3P | 209 38 | | 209 38 | |
| | 4P | 209 39 | | 209 39 | |

### MOUNTING PRINCIPLE

In XL³, the DMX³ devices and the associated busbars are arranged according to an identical principle for all power ratings, that is, the possibility of mounting three busbars and two devices per enclosure.

The installation height of DMX³ units is always 600 mm whatever the type and size of the device. When 2 DMX³ devices are installed in the same cell, this leaves at least a useful 600 mm for running the busbars.

# DMX³ 2500 and 4000

**air circuit breakers from 800 to 4000 A**

NEW

286 56 + 288 02 (p. 27)

286 74 + 288 02 (p. 27)

287 56 + 288 02 (p. 27)

*Dimensions (p. 30 to 33)*
*Electrical characteristics (p. 34 to 41)*

Air circuit breakers equipped with:
- electronic protection unit (to be ordered together for factory assembly). Please ask for DMX³ order form (mandatory)
- auxiliary contacts

## Fixed version

Supplied with rear terminals for horizontal connection

| Pack | Cat.Nos 3P | Cat.Nos 4P | In (A) |
|---|---|---|---|
| | | | **DMX³ - N 2500** |
| | Frame 1 | | Breaking capacity Icu 50 kA (415 V∿) |
| 1 | 286 21 | 286 31 | 800 |
| 1 | 286 22 | 286 32 | 1000 |
| 1 | 286 23 | 286 33 | 1250 |
| 1 | 286 24 | 286 34 | 1600 |
| 1 | 286 25 | 286 35 | 2000 |
| 1 | 286 26 | 286 36 | 2500 |
| | | | **DMX³ - H 2500** |
| | Frame 1 | | Breaking capacity Icu 65 kA (415 V∿) |
| 1 | 286 41 | 286 51 | 800 |
| 1 | 286 42 | 286 52 | 1000 |
| 1 | 286 43 | 286 53 | 1250 |
| 1 | 286 44 | 286 54 | 1600 |
| 1 | 286 45 | 286 55 | 2000 |
| 1 | 286 46 | 286 56 | 2500 |
| | | | **DMX³ - L 2500** |
| | Frame 2 | | Breaking capacity Icu 100 kA (415 V∿) |
| 1 | 286 61 | 286 71 | 800 |
| 1 | 286 62 | 286 72 | 1000 |
| 1 | 286 63 | 286 73 | 1250 |
| 1 | 286 64 | 286 74 | 1600 |
| 1 | 286 65 | 286 75 | 2000 |
| 1 | 286 66 | 286 76 | 2500 |
| | | | **DMX³ - N 4000** |
| | Frame 2 | | Breaking capacity Icu 50 kA (415 V∿) |
| 1 | 286 27 | 286 37 | 3200 |
| 1 | 286 28 | 286 38 | 4000 |
| | | | **DMX³ - H 4000** |
| | Frame 2 | | Breaking capacity Icu 65 kA (415 V∿) |
| 1 | 286 47 | 286 57 | 3200 |
| 1 | 286 48 | 286 58 | 4000 |
| | | | **DMX³ - L 4000** |
| | Frame 2 | | Breaking capacity Icu 100 kA (415 V∿) |
| 1 | 286 67 | 286 77 | 3200 |
| 1 | 286 68 | 286 78 | 4000 |

## Draw-out version

Supplied with a base equipped with flat rear terminals and lockable safety shutters

| Pack | Cat.Nos 3P | Cat.Nos 4P | In (A) |
|---|---|---|---|
| | | | **DMX³ - N 2500** |
| | Frame 1 | | Breaking capacity Icu 50 kA (415 V∿) |
| 1 | 287 21 | 287 31 | 800 |
| 1 | 287 22 | 287 32 | 1000 |
| 1 | 287 23 | 287 33 | 1250 |
| 1 | 287 24 | 287 34 | 1600 |
| 1 | 287 25 | 287 35 | 2000 |
| 1 | 287 26 | 287 36 | 2500 |
| | | | **DMX³ - H 2500** |
| | Frame 1 | | Breaking capacity Icu 65 kA (415 V∿) |
| 1 | 287 41 | 287 51 | 800 |
| 1 | 287 42 | 287 52 | 1000 |
| 1 | 287 43 | 287 53 | 1250 |
| 1 | 287 44 | 287 54 | 1600 |
| 1 | 287 45 | 287 55 | 2000 |
| 1 | 287 46 | 287 56 | 2500 |
| | | | **DMX³ - L 2500** |
| | Frame 2 | | Breaking capacity Icu 100 kA (415 V∿) |
| 1 | 287 61 | 287 71 | 800 |
| 1 | 287 62 | 287 72 | 1000 |
| 1 | 287 63 | 287 73 | 1250 |
| 1 | 287 64 | 287 74 | 1600 |
| 1 | 287 65 | 287 75 | 2000 |
| 1 | 287 66 | 287 76 | 2500 |
| | | | **DMX³ - N 4000** |
| | Frame 2 | | Breaking capacity Icu 50 kA (415 V∿) |
| 1 | 287 27 | 287 37 | 3200 |
| 1 | 287 28 | 287 38 | 4000 |
| | | | **DMX³ - H 4000** |
| | Frame 2 | | Breaking capacity Icu 65 kA (415 V∿) |
| 1 | 287 47 | 287 57 | 3200 |
| 1 | 287 48 | 287 58 | 4000 |
| | | | **DMX³ - L 4000** |
| | Frame 2 | | Breaking capacity Icu 100 kA (415 V∿) |
| 1 | 287 67 | 287 77 | 3200 |
| 1 | 287 68 | 287 78 | 4000 |

# DMX³ 2500 and 4000
**electronic protection units**

NEW

288 02

*Settings and curves (p. 34 to 39)*

DMX³ 2500 and 4000 circuit breakers can be equipped with MP4 electronic protection units (to be ordered together for factory assembly) enabling very precise adjustments of the protection conditions, while maintaining total discrimination with downstream devices
Integrated LCD screen for displaying: current values, fault adjustment and log
MP4 protection units are equipped with batteries for powering in case of mains fault or when the breaker is open or not connected

| Pack | Cat.Nos | Electronic protection unit MP4 LI |
|---|---|---|
| 1 | 288 00 | Electronic protection unit with LCD screen with Im, Ir, tr adjustments on the front |

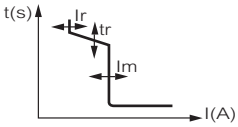


| | | Electronic protection units MP4 LSI |
|---|---|---|
| 1 | 288 01 | Electronic protection unit with LCD screen with Im, tm, Ir, tr and Ii adjustments on the front |

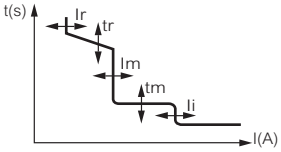


| | | Electronic protection unit MP4 LSIg |
|---|---|---|
| 1 | 288 02 | Electronic protection unit with LCD screen with Im, tm, Ir, tr, Ii, Ig and tg adjustments on the front |

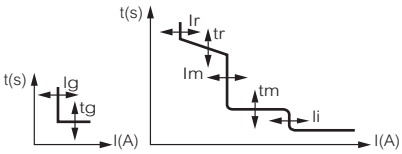


| | | Accessories for electronic protection units |
|---|---|---|
| 1 | 288 05(1) | Communication option for DMX³ electronic protection units |
| 1 | 288 06 | 12 V DC external power supply for DMX³ electronic protection units |
| 1 | 288 07(1) | Earth leakage module for DMX³ electronic protection units (needs an external coil Cat.No 288 11) |
| 1 | 288 11(1) | External neutral |
| 1 | 288 12(1) | Module programmable output |

(1) Optional accessories, to be ordered when ordering electronic protection unit and DMX³ air circuit breakers for factory assembly

# DMX³-I
**trip free switches from 1250 to 4000 A**

NEW

286 96

287 96

*Dimensions (p. 30 to 33)*
*Technical characteristics (p. 34 to 41)*

Trip free switches equipped with:
- rear terminals
- auxiliary contacts

| Pack | Cat.Nos 3P | Cat.Nos 4P | Fixed version |
|---|---|---|---|
| | Frame 1 | | **DMX³-I 2500** |
| | 3P | 4P | In (A) |
| 1 | 286 83 | 286 93 | 1250 |
| 1 | 286 84 | 286 94 | 1600 |
| 1 | 286 85 | 286 95 | 2000 |
| 1 | 286 86 | 286 96 | 2500 |
| | Frame 2 | | **DMX³-I 4000** |
| | 3P | 4P | In (A) |
| 1 | 286 87 | 286 97 | 3200 |
| 1 | 286 88 | 286 98 | 4000 |

| Pack | Cat.Nos 3P | Cat.Nos 4P | Draw-out version |
|---|---|---|---|
| | | | Supplied with a base equipped with flat rear terminals and lockable safety shutters |
| | Frame 1 | | **DMX³-I 2500** |
| | 3P | 4P | In (A) |
| 1 | 287 83 | 287 93 | 1250 |
| 1 | 287 84 | 287 94 | 1600 |
| 1 | 287 85 | 287 95 | 2000 |
| 1 | 287 86 | 287 96 | 2500 |
| | Frame 2 | | **DMX³-I 4000** |
| | 3P | 4P | In (A) |
| 1 | 287 87 | 287 97 | 3200 |
| 1 | 287 88 | 287 98 | 4000 |

# DMX³ 2500 and 4000
## auxiliaries and accessories

NEW


288 51


288 58


288 37


288 44

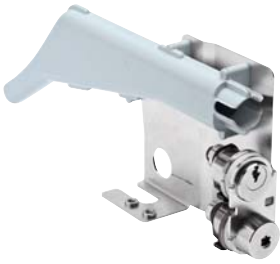
288 32 + 288 33


288 15

| Pack | Cat.Nos | Control and signalling auxiliaries |
|---|---|---|
| | | **Shunt trip** |
| | | When energised the circuit breaker will be tripped |
| 1 | 288 48 | 24 V∿/⎓ |
| 1 | 288 49 | 48 V∿/⎓ |
| 1 | 288 50 | 110 V∿/⎓ |
| 1 | 288 51 | 230 V∿/⎓ |
| 1 | 288 52 | 415 V∿ |
| | | **Undervoltage releases** |
| | | When the coil is de-energised, the circuit breaker will be tripped |
| 1 | 288 55 | 24 V∿/⎓ |
| 1 | 288 56 | 48 V∿/⎓ |
| 1 | 288 57 | 110 V∿/⎓ |
| 1 | 288 58 | 230 V∿/⎓ |
| 1 | 288 59 | 415 V∿ |
| | | **Delayed undervoltage releases** |
| 1 | 288 62 | 110 V∿/⎓ |
| 1 | 288 63 | 230 V∿/⎓ |
| | | **Motor operators** |
| | | To motorise a DMX, it is necessary to attach, to the motor operators, a release coil (undervoltage or trip on energising) and a closing coil<br>The motor operator is delivered with a spring charge contact |
| 1 | 288 34 | 24 V∿/⎓ |
| 1 | 288 35 | 48 V∿/⎓ |
| 1 | 288 36 | 110 V∿/⎓ |
| 1 | 288 37 | 230 V∿/⎓ |
| 1 | 288 38 | 415 V∿ |
| | | **Closing coils** |
| | | Enables remote closing of the circuit breaker if the closing spring is charged |
| 1 | 288 41 | 24 V∿/⎓ |
| 1 | 288 42 | 48 V∿/⎓ |
| 1 | 288 43 | 110 V∿/⎓ |
| 1 | 288 44 | 230 V∿/⎓ |
| 1 | 288 45 | 415 V∿ |
| | | **Signalling contact for auxiliaries** |
| 1 | 288 16 | Signalling contact for shunt trips, undervoltage releases and closing coils |

| Pack | Cat.Nos | Locking |
|---|---|---|
| | | **Key locking in "open" position** |
| 1 | 288 30 | Profalux lock (key included) - to be fitted on the frame Cat.No 288 28 |
| 1 | 288 31 | Ronis lock (key included) - to be fitted on the frame Cat.No 288 28 |
| 1 | 288 28 | 2 hole support frame for Ronis or Profalux locks Cat.Nos 288 30/31 |
| | | **Key locking in the draw-out position** |
| | | Mounting of the lock on the base<br>3 positions : inserted/test/draw-out |
| 1 | 288 32 | Profalux lock (key included) |
| 1 | 288 33 | Ronis lock (key included) |
| | | **Door locking** |
| | | Prevents opening of the door with the circuit breaker closed |
| 1 | 288 20 | Left-hand and right-hand side mounting |
| | | **Padlocks in "open" position** |
| 1 | 288 21 | Padlocking system for ACB (padlock not supplied) |
| 1 | 288 26 | Padlocking system for shutters (padlock not supplied) |

| | 3P | 4P | Equipment for conversion of a fixed device into draw-out device |
|---|---|---|---|
| | | | **Bases for draw-out device** |
| 1 | 289 02 | 289 03 | For DMX³/DMX³-I frame 1 |
| 1 | 289 04 | 289 05 | For DMX³/DMX³-I frame 2 |
| | | | **Transformation kit for draw-out version** |
| 1 | 289 09 | 289 10 | For DMX³/DMX³-I frame 1 |
| 1 | 289 11 | 289 12 | For DMX³/DMX³-I frame 2 |

| | | Accessories |
|---|---|---|
| 1 | 288 25 | Rating mis-insertion device<br>Prevents the insertion of a draw-out circuit breaker in an incompatible base |
| 1 | 288 23 | Operations counter<br>Counts total number of operation cycles of the device |
| 1 | 288 14 | Contact "ready to close" with charged springs |
| 1 | 288 15 | Set of additional signalling contacts |
| 1 | 288 22 | Door sealing IP 40 |
| 1 | 288 79 | Lifting plate |

# DMX³ 2500 and 4000
## equipment for supply invertors

NEW

261 93

288 64

Technical characteristics (p. 33)

| Pack | Cat.Nos | Automation control unit |
|---|---|---|
| | | For setting the conditions for supply inversion, generator on/off, status acquisition for DMX and DPX circuit-breakers, open/closed<br>Power supply: 230 V∿ and 12-24-48 V⎓<br>Connection by plug-in terminals |
| 1 | 261 93 | Standard unit |
| 1 | 261 94 | Communicating unit, enabling data transmission (RS 485 port) |

| Pack | Cat.Nos | Equipment for supply invertors |
|---|---|---|
| | | The mechanical interlock is set up using cables and can interlock 2 or 3 devices, which may be different type in a vertical or horizontal configuration<br>The interlock unit is mounted on the right-hand side of the device<br>Supplied complete with cable set (cable lenght to be specified according to every configuration) |
| 1 | 288 64 | Interlock for DMX³ frame 1 |
| 1 | 288 65 | Interlock for DMX³ frame 2 |

| Pack | Cat.Nos | Cable interlock |
|---|---|---|
| 1 | 289 20 | Type 1 (2600 mm) |
| 1 | 289 21 | Type 2 (3000 mm) |
| 1 | 289 22 | Type 3 (3600 mm) |
| 1 | 289 23 | Type 4 (4000 mm) |
| 1 | 289 24 | Type 5 (4600 mm) |
| 1 | 289 25 | Type 6 (5600 mm) |

**For details on cable interlok and supply invertors, please consult us**

# DMX³ 2500 and 4000
## rear terminals

NEW

288 84

288 82

288 96

288 94

288 91

Dimensions (p. 30 to 33)

| Pack | Cat.Nos 3P | Cat.Nos 4P | Rear terminals |
|---|---|---|---|
| | | | **For DMX³ frame 1 fixed version** |
| 1 | 288 84 | 288 85 | For flat connection with bars<br>To be fixed onto horizontal rear terminals of the circuit breaker |
| 1 | 288 82 | 288 83 | For vertical connection with bars<br>Those terminals are used in order to transform a flat connection into a vertical one<br>To be fixed onto Cat.No 288 84/85 according to the number of poles |
| | | | **For DMX³ frame 1 draw-out version** |
| 1 | 288 96 | 288 97 | For vertical or horizontal connection with bars<br>To be fixed onto plate rear terminals of the circuit breaker |
| | | | **For DMX³ frame 2 fixed version** |
| 1 | 288 92 | 288 93 | For flat connection with bars<br>To be fixed onto horizontal rear terminals of the circuit breaker |
| | | | **For DMX³ frame 2 draw-out version** |
| 1 | 288 94 | 288 95 | For vertical or horizontal connection with bars<br>To be fixed onto plate rear terminals of the circuit breaker |

| Pack | Cat.Nos 3P | Cat.Nos 4P | Spreaders for DMX³ frame 1 fixed version |
|---|---|---|---|
| | | | To be fixed onto horizontal rear terminals of the circuit breaker |
| 1 | 288 86 | 288 87 | For flat connection with bars |
| 1 | 288 88 | 288 89 | For vertical connection with bars |
| 1 | 288 90 | 288 91 | For horizontal connection with bars |

# DMX³ 2500 and DMX³-I 2500 - frame 1
dimensions

## ■ Fixed version - frame 1

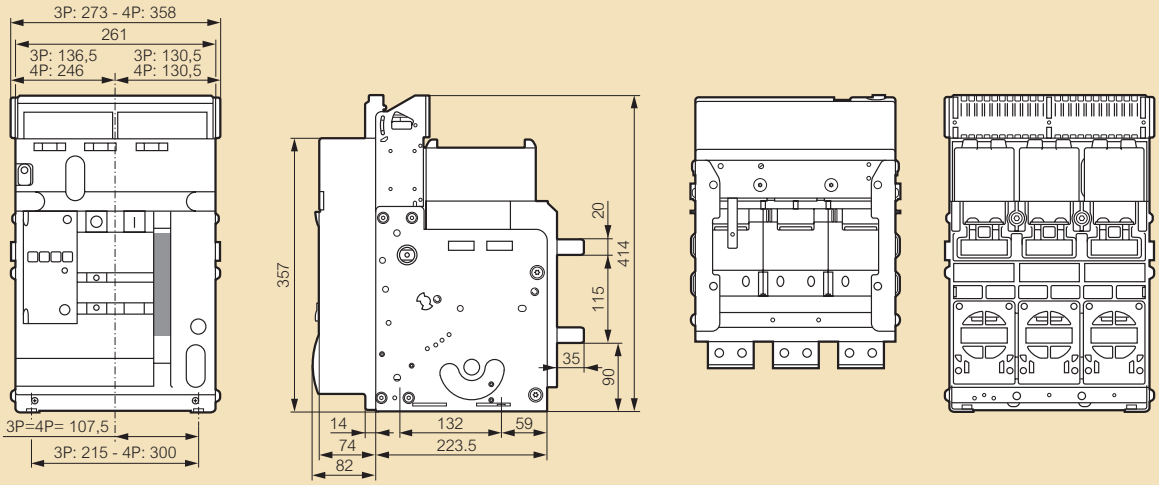


### Rear terminals fixed version

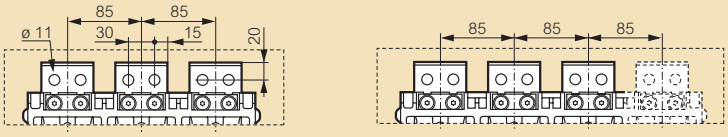


### Rear terminals for flat connection with bars
Cat. Nos 288 84/85

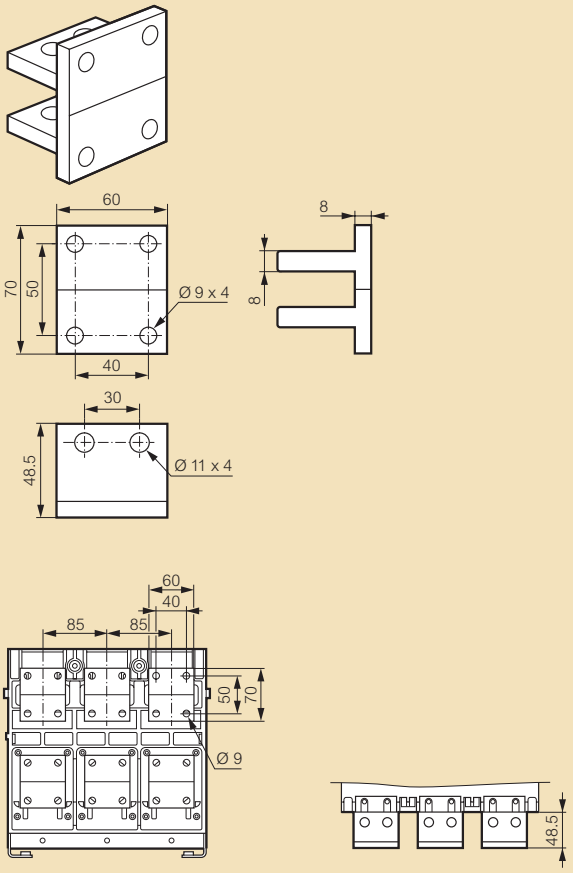


### Rear terminals for vertical connection with bars
Cat. Nos 288 82/83

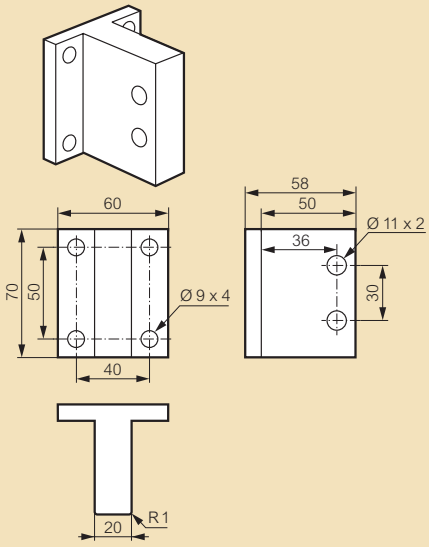

## ■ Fixed version - frame 1 (continued)

**Spreaders for flat connection with bars**

Cat.No 288 86

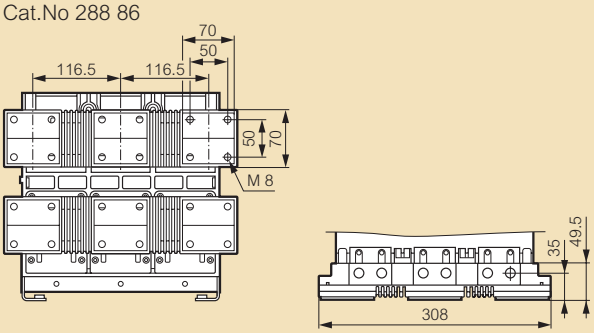


Cat.No 288 87

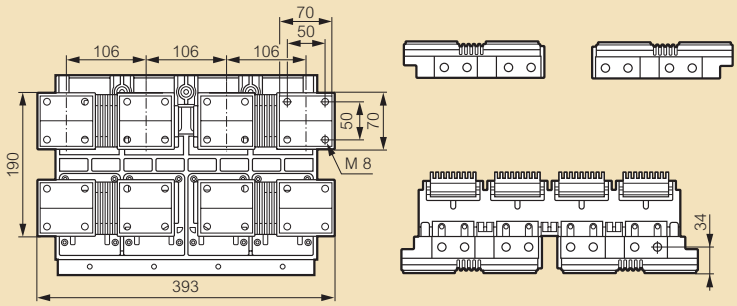


**Spreaders for vertical connection with bars**

Cat.No 288 88

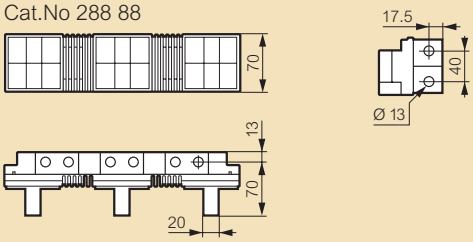


Cat.No 288 89

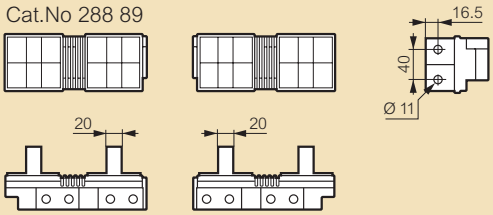


**Spreaders for horizontal connection with bars**

Cat.No 288 90

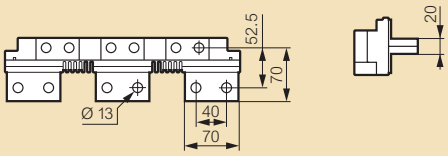


Cat.No 288 91

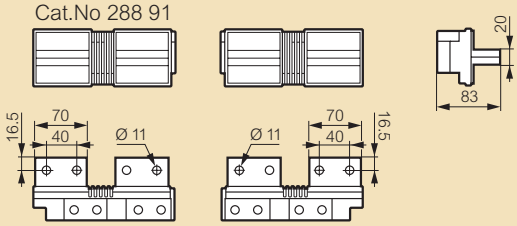


## ■ Draw-out version - frame 1

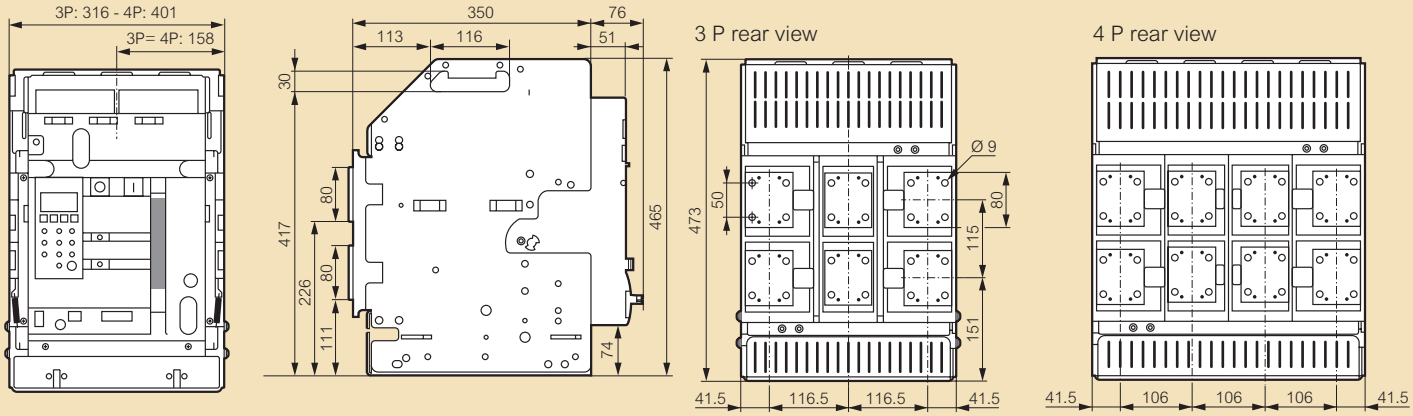


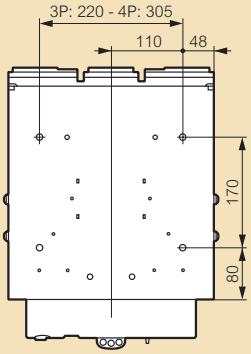


**Rear terminals for vertical or horizontal connection with bars**

Cat.Nos 288 96/97

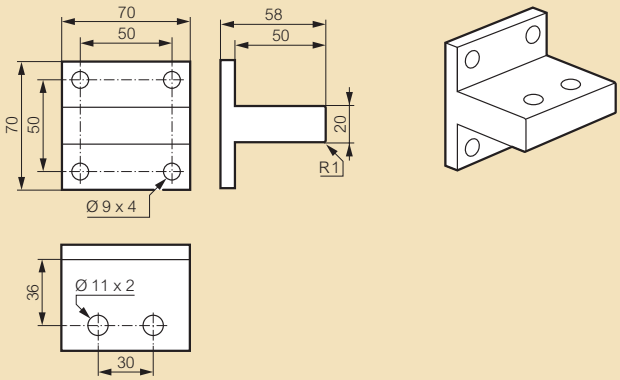

# DMX³ 2500, DMX³-I 2500, DMX³ 4000 and DMX³-I 4000 - frame 2
dimensions

## ■ Fixed version - frame 2

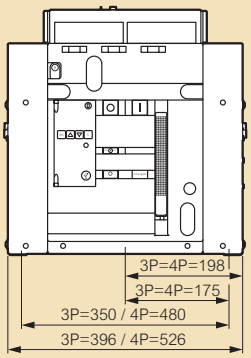


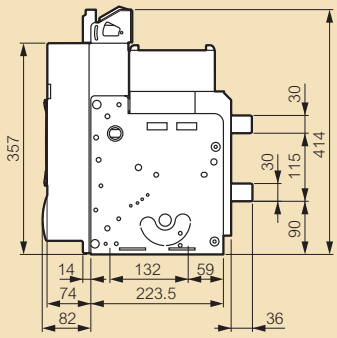


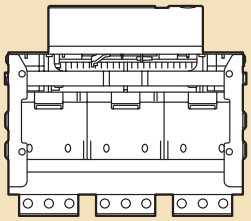

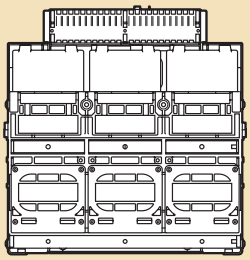

**Rear terminals fixed version**

3P version

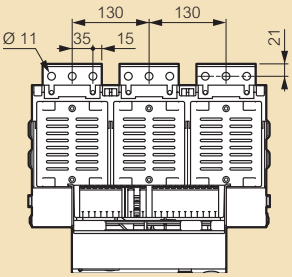


4P version

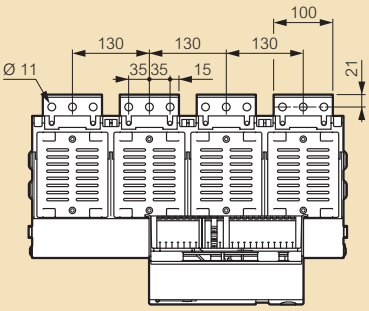


**Rear terminals for flat connection with bars**

Cat. No 288 92

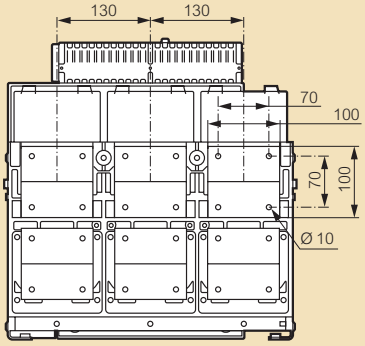


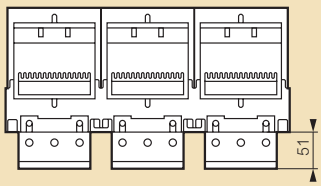


Cat. Nos 288 92/93

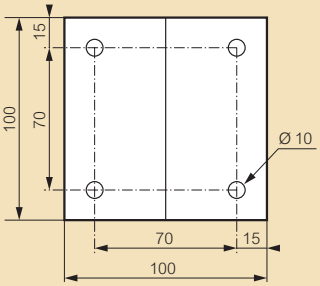


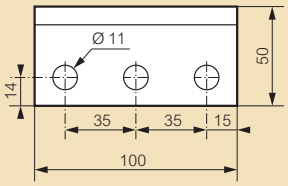


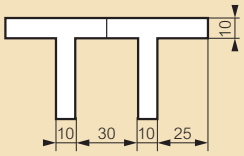


Cat. No 288 93

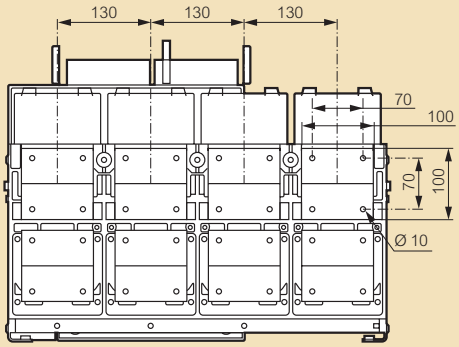


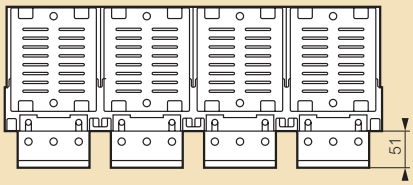

# DMX³ 2500 and 4000
**automation control units for supply invertors**

## ■ Draw-out version - frame 2

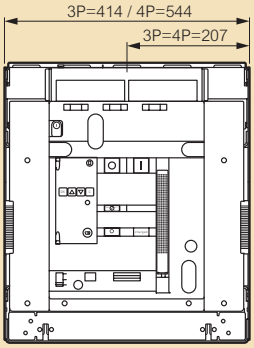


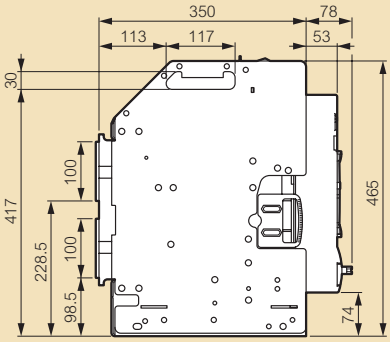


3P version

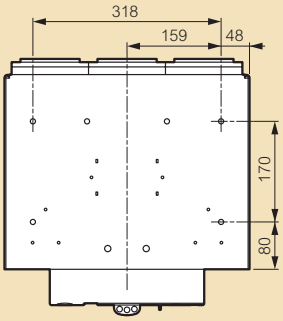


4P version

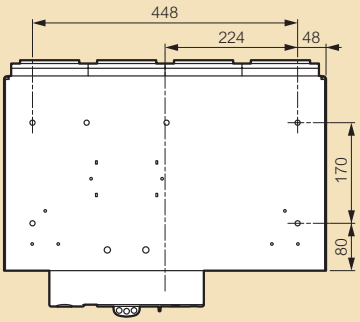


3P rear view

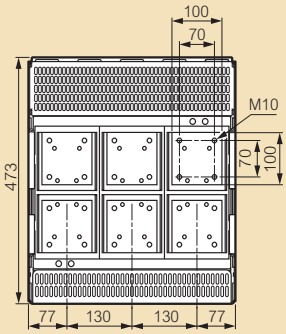


4P rear view

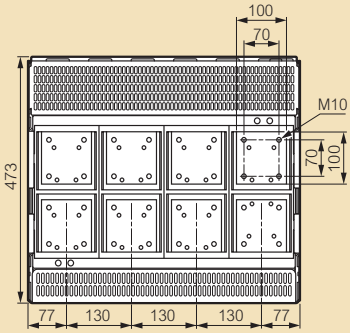


**Rear terminals for vertical or horizontal connection with bars**
Cat.Nos 288 94/95

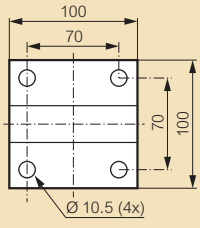


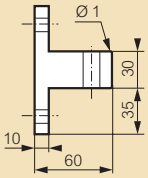


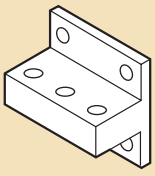

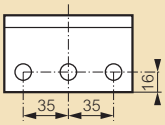


## ■ Functions

**Standard unit Cat.No 261 93**

Used to adjust and manage the source inversion operating conditions (DMX³):
- Remote control (opening/closing) of MCBs
- Microprocessor output from unit (positive safety)
- Programmable I/O
- Voltage reading: 3-phase
  phase-neutral
  phase-phase
- Control (on/off) of generator set
- Indication of the state of the MCBs (open/closed/tripped)
- Source inversion blocked in the event of:
  • Tripping of 1 or 2 devices
  • If a draw-out ACB is not inserted in its base, as the open/close command of the unit is inoperative

**Communicating unit Cat.No 261 94**

All the standard functions, plus:
- Maximum voltage reading
- Reading of phase rotation direction
- Frequency reading
- Communication: data transmission via the RS 485 port (Modbus protocol)

## ■ Technical characteristics

Power supply: 187 to 264 V∿
9 to 65 V⎓
Frequency: 45 to 65 Hz
Un: 80 to 690 V∿
Control relay (1 and 4): 1 NO - 12 A - 250 V∿
1 NO - 5 A - 250 V∿
1 NO/NC - 5 A - 250 V∿
Cable cross-section: 0.2 to 2.5 mm²
Dimensions (width x height x depth): 144 x 144 x 90 mm
Protection: IP 20 at the rear
IP 41 at the front
IP 54 at the front with protective screen
Operating temperature: - 20 °C to + 60 °C

| | Operating ranges |
|---|---|
| **Main/secondary minimum voltage range** | 70-98 % Un |
| **Main/secondary voltage absence range** | 60-85 % Un |
| **Main/secondary minimum voltage delay** | 0.1-900 s |
| **Main/secondary voltage absence delay** | 0.1-30 s |
| **Generator operating delay** | 0-900 s |
| **Main to secondary switching delay** | 0.1-90 s |
| **Main line presence delay** | 1-3600 s |
| **Secondary to main switching delay** | 0.1-90 s |
| **Generator set stopping delay** | 1-3600 s |

**Dimensions and panel board faceplate cut-out**

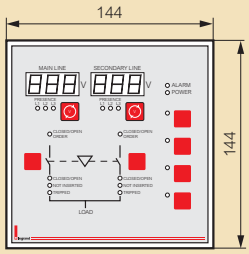


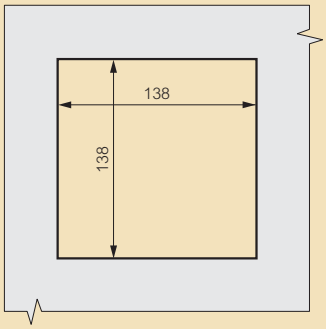

## ■ Settings of the electronic protection units

**MP4 LI**

Ir, Im, tr adjustment on front panel

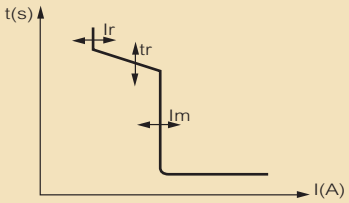


- **Long time delay protection against overloads**
  Ir from 0.4 to 1 x In (6 + 6 steps) on two selectors
  (0.4 ÷ 0.9, by steps of 0.1 and 0.0 ÷ 0.1, by steps of 0.02)
- **Long delay protection operation time**
  tr - at 6 x Ir (4 + 4 steps)
  tr = 5-10-20-30 s (MEM ON) 30-20-10-5 s (MEM OFF)
- **Short time delay protection against short circuits**
  Im from 1.5 to 10 Ir (9 steps) Im = 1.5-2-2.5-3-4-5-6-8-10 x Ir
- **Neutral protection:** IN = I-II-III-IV x Ir (0-50-100-100 %)

**MP4 LSI**

Ir, tr, Im, tm, Ii adjustment on front panel

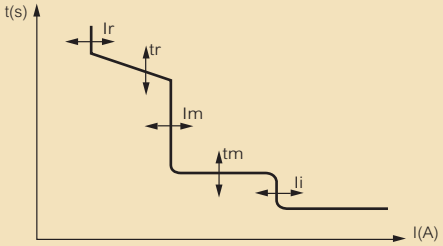


- **Long time delay protection against overloads**
  Ir from 0.4 to 1 x In (6 + 6 steps) on two selectors (0.4 ÷ 0.9, by steps of 0.1 and 0.0 ÷ 0.1, by steps of 0.02)
- **Long delay protection operation time**
  tr - at 6 x Ir (4 + 4 steps) tr = 5-10-20-30 s (MEM ON) 30-20-10-5 s (MEM OFF)
- **Short time delay protection against short circuits**
  Im from 1.5 to 10 x Ir (9 steps) Im = 1.5-2-2.5-3-4-5-6-8-10 x Ir
- **Short time delay protection operation time**
  tm from 0 to 0.3 s (4 + 4 steps) tm = 0-0.1-0.2-0.3 s (t=cost), 0.3-0.2-0.1-0.01 s (I2t=cost)
- **Instantaneous protection against very high short circuits**
  Ii from 2 to Icw x In ( 9 steps) Ii=2-3-4-6-8-10-12-15-Icw x In
- **Neutral protection:** IN = I-II-III-IV x Ir (0-50-100-100 %)

**MP4 LSIg**

Ir, tr, Ii, Ig, tg, Im, tm, adjustment on front panel

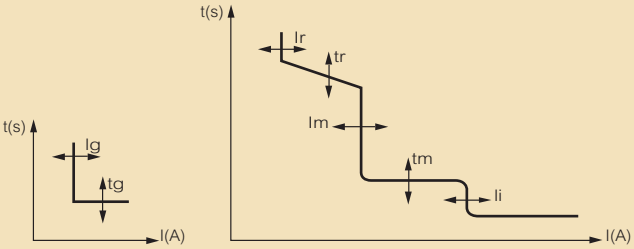


- **Long time delay protection against overloads**
  Ir from 0.4 to 1 x In (6 +6 steps) on two selectors
  (0.4 ÷ 0.9, by steps of 0.1 and 0.0 ÷ 0.1, by steps of 0.02)
- **Long delay protection operation time**
  tr - at 6 x Ir (4 + 4 steps) tr = 5-10-20-30 s (MEM ON)
  30-20-10-5 s (MEM OFF)
- **Short time delay protection against short circuits**
  Im from 1.5 to 10 x Ir (9 steps) Im = 1.5-2-2.5-3-4-5-6-8-10 x Ir
- **Short time delay protection operation time**
  tm from 0 to 0.3 s (4 + 4 steps) tm = 0-0.1-0.2-0.3 s (t=constant), 0.3-0.2-0.t01 s (I2t=constant)
- **Instantaneous protection against very high short circuits**
  Ii from 2 to Icw x In ( 9 steps) Ii = 2-3-4-6-8-10-12-15-Icw x In
- **Earth fault current**
  Ig from 0.2 to 1 x In ( 9 steps)
- **Time delay on earth fault tripping**
  tg from 0.1 to 1 x In ( 4 steps)
- **Neutral protection:** IN = I-II-III-IV x Ir (0-50-100-100 %)

# selectivity table DMX³ / DPX™ and DMX³ / DX™

## ■ Limits of selectivity DMX³ / DPX™ (three phase circuit at 400 V~)

| Downstream MCCB | Upstream ACB | | | | | | | | |
|---|---|---|---|---|---|---|---|---|---|
| | In | DMX³ 2500 (50 kA / 65 kA / 100 kA) | | | | | | DMX³ 4000 (50 kA / 65 kA / 100 kA) | |
| | | 800 | 1000 | 1250 | 1600 | 2000 | 2500 | 3200 | 4000 |
| DPX 125 (16 kA / 25 kA / 36 kA) | 16 | T | T | T | T | T | T | T | T |
| | 25 | T | T | T | T | T | T | T | T |
| | 40 | T | T | T | T | T | T | T | T |
| | 63 | T | T | T | T | T | T | T | T |
| | 100 | T | T | T | T | T | T | T | T |
| | 125 | T | T | T | T | T | T | T | T |
| DPX 160 / 250 ER (25 kA / 36 kA / 50 kA) | 63 | T | T | T | T | T | T | T | T |
| | 100 | T | T | T | T | T | T | T | T |
| | 160 | T | T | T | T | T | T | T | T |
| | 250 | T | T | T | T | T | T | T | T |
| DPX 250 thermal magnetic (36 kA / 70 kA / 100 kA) | 40 | T | T | T | T | T | T | T | T |
| | 63 | T | T | T | T | T | T | T | T |
| | 100 | T | T | T | T | T | T | T | T |
| | 160 | T | T | T | T | T | T | T | T |
| | 250 | T | T | T | T | T | T | T | T |
| DPX 250 S1 / S2 (36 kA / 70 kA / 100 kA) | 40 | T | T | T | T | T | T | T | T |
| | 100 | T | T | T | T | T | T | T | T |
| | 160 | T | T | T | T | T | T | T | T |
| | 250 | T | T | T | T | T | T | T | T |
| DPX 630 thermal magnetic (36 kA / 70 kA / 100 kA) | 250 | T | T | T | T | T | T | T | T |
| | 320 | T | T | T | T | T | T | T | T |
| | 400 | T | T | T | T | T | T | T | T |
| | 500 | T | T | T | T | T | T | T | T |
| | 630 | T | T | T | T | T | T | T | T |
| DPX 630 S1 / S2 (36 kA / 70 kA / 100 kA) | 250 | T | T | T | T | T | T | T | T |
| | 400 | T | T | T | T | T | T | T | T |
| | 630 | T | T | T | T | T | T | T | T |
| DPX 1250 thermal magnetic (50 kA / 70 kA) | 800 | - | T | T | T | T | T | T | T |
| | 1000 | - | - | T | T | T | T | T | T |
| | 1250 | - | - | - | T | T | T | T | T |
| DPX 1600 S1 / S2 (50 kA / 70 kA) | 800 | - | T | T | T | T | T | T | T |
| | 1250 | - | - | - | T | T | T | T | T |
| | 1600 | - | - | - | - | T | T | T | T |

T: total selectivity, up to downstream circuit breaker breaking capacity according to IEC 60947-2

## ■ Limits of selectivity DMX³ / DX™ (three phase circuit at 400 V~)

| Downstream MCB | Upstream ACB | | | | | | | | |
|---|---|---|---|---|---|---|---|---|---|
| | In | DMX³ 2500 (50 kA / 65 kA / 100 kA) | | | | | | DMX³ 4000 (50 kA / 65 kA / 100 kA) | |
| | | 800 | 1000 | 1250 | 1600 | 2000 | 2500 | 3200 | 4000 |
| DX 6000 - 10 kA B and C curves | 1 to 125 A | T | T | T | T | T | T | T | T |
| DX-H 10000 - 25 kA B and C curves | 1 to 63 A | T | T | T | T | T | T | T | T |
| DX 6000 - 15 kA D curve | 1 to 63 A | T | T | T | T | T | T | T | T |
| DX-L 50 kA C curve | 10 to 63 A | T | T | T | T | T | T | T | T |

T: total selectivity, up to downstream circuit breaker breaking capacity according to IEC 60947-2

# selectivity table DMX³ / DMX³

## ■ Limits of selectivity DMX³ / DMX³ (three phase circuit at 400 V~)

| Downstream ACB | Upstream ACB | | | | | | | | | | | | |
|---|---|---|---|---|---|---|---|---|---|---|---|---|---|
| | In | DMX³ - N 2500 (50 kA) | | | | | | DMX³ - H 2500 (65 kA) | | | | | |
| | | 800 | 1000 | 1250 | 1600 | 2000 | 2500 | 800 | 1000 | 1250 | 1600 | 2000 | 2500 |
| DMX³ - N 2500 (50 kA) | 800 | - | T | T | T | T | T | T | T | T | T | T | T |
| | 1000 | - | - | T | T | T | T | - | T | T | T | T | T |
| | 1250 | - | - | - | T | T | T | - | - | T | T | T | T |
| | 1600 | - | - | - | - | T | T | - | - | - | T | T | T |
| | 2000 | - | - | - | - | - | T | - | - | - | - | T | T |
| | 2500 | - | - | - | - | - | - | - | - | - | - | - | T |
| DMX³ - H 2500 (65 kA) | 800 | - | - | - | - | - | - | - | T | T | T | T | T |
| | 1000 | - | - | - | - | - | - | - | - | T | T | T | T |
| | 1250 | - | - | - | - | - | - | - | - | - | T | T | T |
| | 1600 | - | - | - | - | - | - | - | - | - | - | T | T |
| | 2000 | - | - | - | - | - | - | - | - | - | - | - | T |
| | 2500 | - | - | - | - | - | - | - | - | - | - | - | - |

T: total selectivity, up to downstream circuit breaker breaking capacity according to IEC 60947-2

| Downstream ACB | Upstream ACB | | | | | | | | |
|---|---|---|---|---|---|---|---|---|---|
| | In | DMX³ - L 2500 (100 kA) | | | | | | DMX³ - L 4000 (100 kA) | |
| | | 800 | 1000 | 1250 | 1600 | 2000 | 2500 | 3200 | 4000 |
| DMX³ - N 2500 (50 kA) | 800 | T | T | T | T | T | T | T | T |
| | 1000 | - | T | T | T | T | T | T | T |
| | 1250 | - | - | T | T | T | T | T | T |
| | 1600 | - | - | - | T | T | T | T | T |
| | 2000 | - | - | - | - | T | T | T | T |
| | 2500 | - | - | - | - | - | T | T | T |
| DMX³ - H 2500 (65 kA) | 800 | T | T | T | T | T | T | T | T |
| | 1000 | - | T | T | T | T | T | T | T |
| | 1250 | - | - | T | T | T | T | T | T |
| | 1600 | - | - | - | T | T | T | T | T |
| | 2000 | - | - | - | - | T | T | T | T |
| | 2500 | - | - | - | - | - | T | T | T |
| DMX³ - L 2500 (100 kA) | 800 | - | T | T | T | T | T | T | T |
| | 1000 | - | - | T | T | T | T | T | T |
| | 1250 | - | - | - | T | T | T | T | T |
| | 1600 | - | - | - | - | T | T | T | T |
| | 2000 | - | - | - | - | - | T | T | T |
| | 2500 | - | - | - | - | - | - | T | T |
| DMX³ - N 4000 (100 kA) | 3200 | - | - | - | - | - | - | - | T |
| | 4000 | - | - | - | - | - | - | - | - |

T: total selectivity, up to downstream circuit breaker breaking capacity according to IEC 60947-2

# back-up between ACBs and MCCBs

## ■ Back-up between DMX³ / DPX™ (according to IEC 64-8/5)

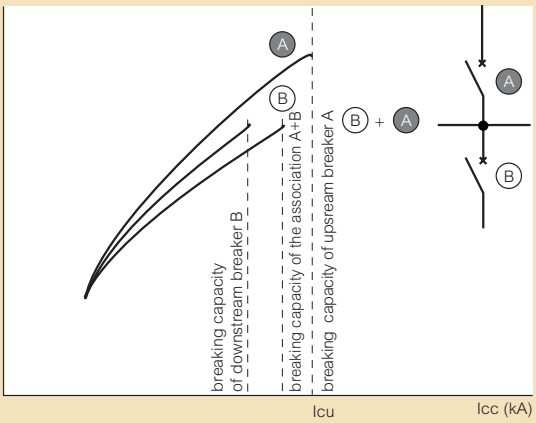


An automatic DPX circuit breaker may be used to break short circuits higher than its rated breaking capacity, if an upstream DMX³ circuit breaker will simultaneously open the circuit
The action of the two breakers working together favours the arc extinction and reduces the pass through energy
The breaking capacity of the A + B association is greater than that of the downstream breaker B and may reach the Icu value of the upstream circuit breaker A
These values can only be validated by short circuit tests (according to IEC 60947-2 norm)

| Downstream MCCB | Upstream ACB | | | | | | | |
|---|---|---|---|---|---|---|---|---|
| | DMX³ - N 2500 Icu = 50 kA | | | | | | DMX³ - N 4000 Icu = 50 kA | |
| | 800 | 1000 | 1250 | 1600 | 2000 | 2500 | 800 | 1000 |
| DPX 125 | 50 | 50 | 50 | 50 | 50 | 50 | 50 | 50 |
| DPX 160 / DPX 250 ER | 50 | 50 | 50 | 50 | 50 | 50 | 50 | 50 |
| DPX 250 | 50 | 50 | 50 | 50 | 50 | 50 | 50 | 50 |
| DPX 630 | 50 | 50 | 50 | 50 | 50 | 50 | 50 | 50 |
| DPX 1250 - 800 A | 50 | 50 | 50 | 50 | 50 | 50 | 50 | 50 |
| DPX 1250 - 1000 A | - | 50 | 50 | 50 | 50 | 50 | 50 | 50 |
| DPX 1250 - 1250 A | - | - | 50 | 50 | 50 | 50 | 50 | 50 |
| DPX 1600 | - | - | - | 50 | 50 | 50 | 50 | 50 |

| Downstream MCCB | Upstream ACB | | | | | | | |
|---|---|---|---|---|---|---|---|---|
| | DMX³ - H 2500 Icu = 65 kA | | | | | | DMX³ - H 4000 Icu = 65 kA | |
| | 800 | 1000 | 1250 | 1600 | 2000 | 2500 | 800 | 1000 |
| DPX 125 | 65 | 65 | 65 | 65 | 65 | 65 | 65 | 65 |
| DPX 160 / DPX 250 ER | 65 | 65 | 65 | 65 | 65 | 65 | 65 | 65 |
| DPX 250 | 65 | 65 | 65 | 65 | 65 | 65 | 65 | 65 |
| DPX 630 | 65 | 65 | 65 | 65 | 65 | 65 | 65 | 65 |
| DPX 1250 - 800 A | 65 | 65 | 65 | 65 | 65 | 65 | 65 | 65 |
| DPX 1250 - 1000 A | - | 65 | 65 | 65 | 65 | 65 | 65 | 65 |
| DPX 1250 - 1250 A | - | - | 65 | 65 | 65 | 65 | 65 | 65 |
| DPX 1600 | - | - | - | 65 | 65 | 65 | 65 | 65 |

| Downstream MCCB | Upstream ACB | | | | | | | |
|---|---|---|---|---|---|---|---|---|
| | DMX³ - L 2500 Icu = 100 kA | | | | | | DMX³ - L 4000 Icu = 100 kA | |
| | 800 | 1000 | 1250 | 1600 | 2000 | 2500 | 800 | 1000 |
| DPX 125 | 100 | 100 | 100 | 100 | 100 | 100 | 100 | 100 |
| DPX 160 / DPX 250 ER | 100 | 100 | 100 | 100 | 100 | 100 | 100 | 100 |
| DPX 250 | 100 | 100 | 100 | 100 | 100 | 100 | 100 | 100 |
| DPX 630 | 100 | 100 | 100 | 100 | 100 | 100 | 100 | 100 |
| DPX 1250 - 800 A | 100 | 100 | 100 | 100 | 100 | 100 | 100 | 100 |
| DPX 1250 - 1000 A | - | 100 | 100 | 100 | 100 | 100 | 100 | 100 |
| DPX 1250 - 1250 A | - | - | 100 | 100 | 100 | 100 | 100 | 100 |
| DPX 1600 | - | - | - | 100 | 100 | 100 | 100 | 100 |

## ■ Tripping curves for MP4 protection units

### DMX³ - N (Icu = 50 kA)

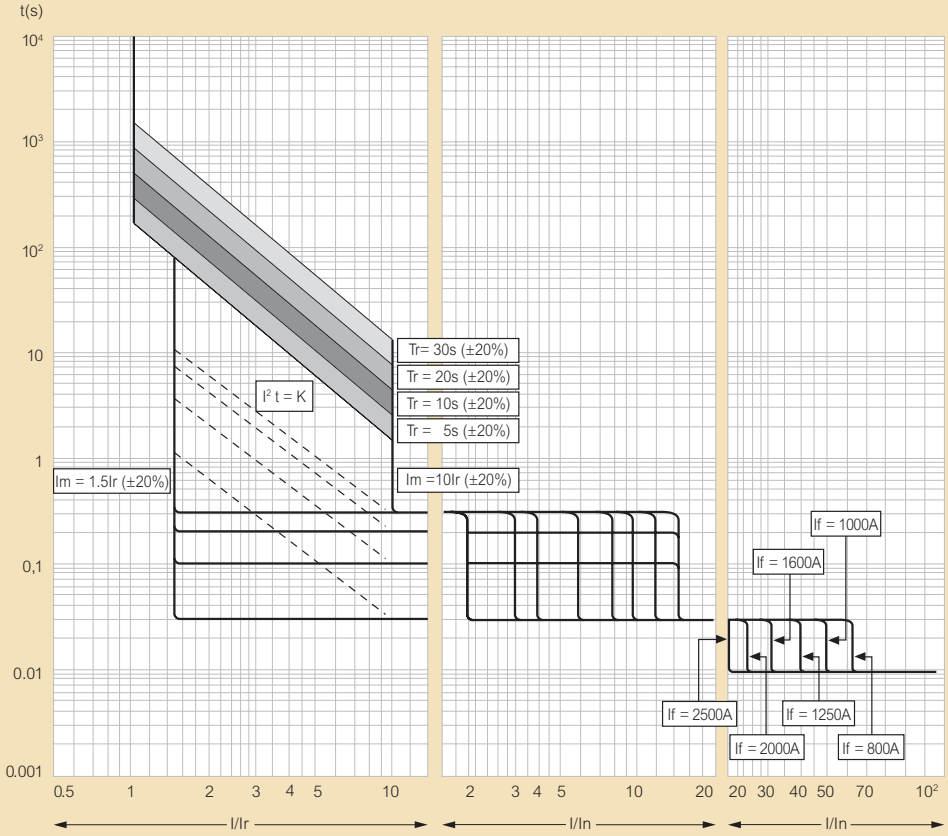


### DMX³ - H (Icu = 65 kA)

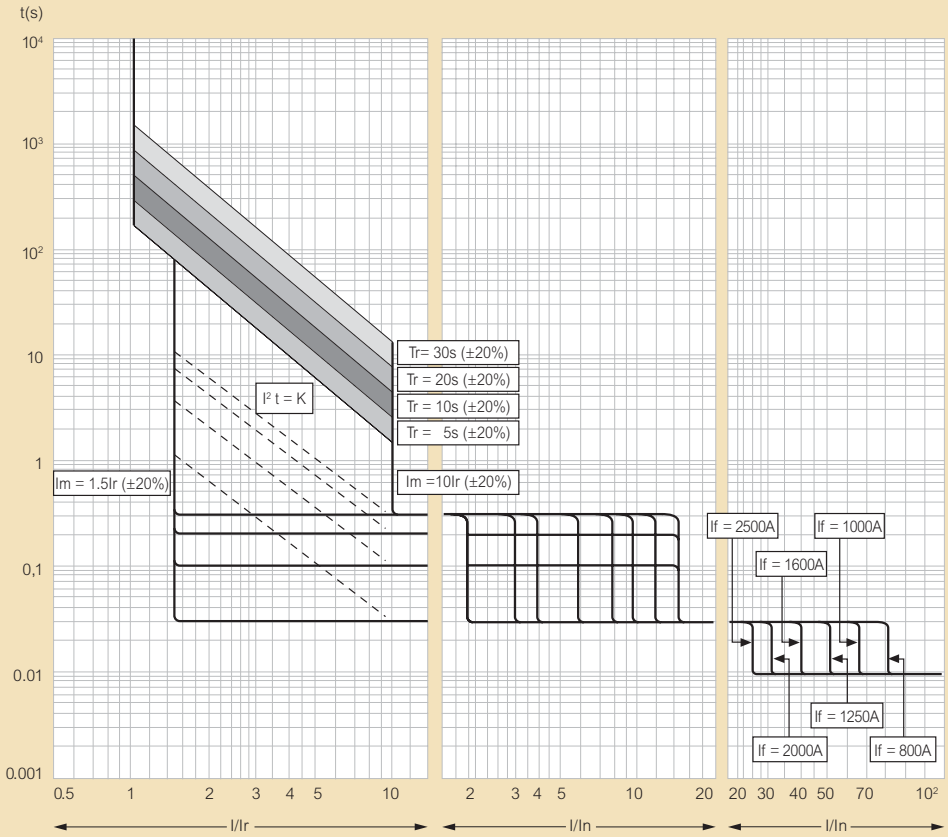

# DMX³ 2500 and 4000

## ■ Tripping curves for MP4 protection units

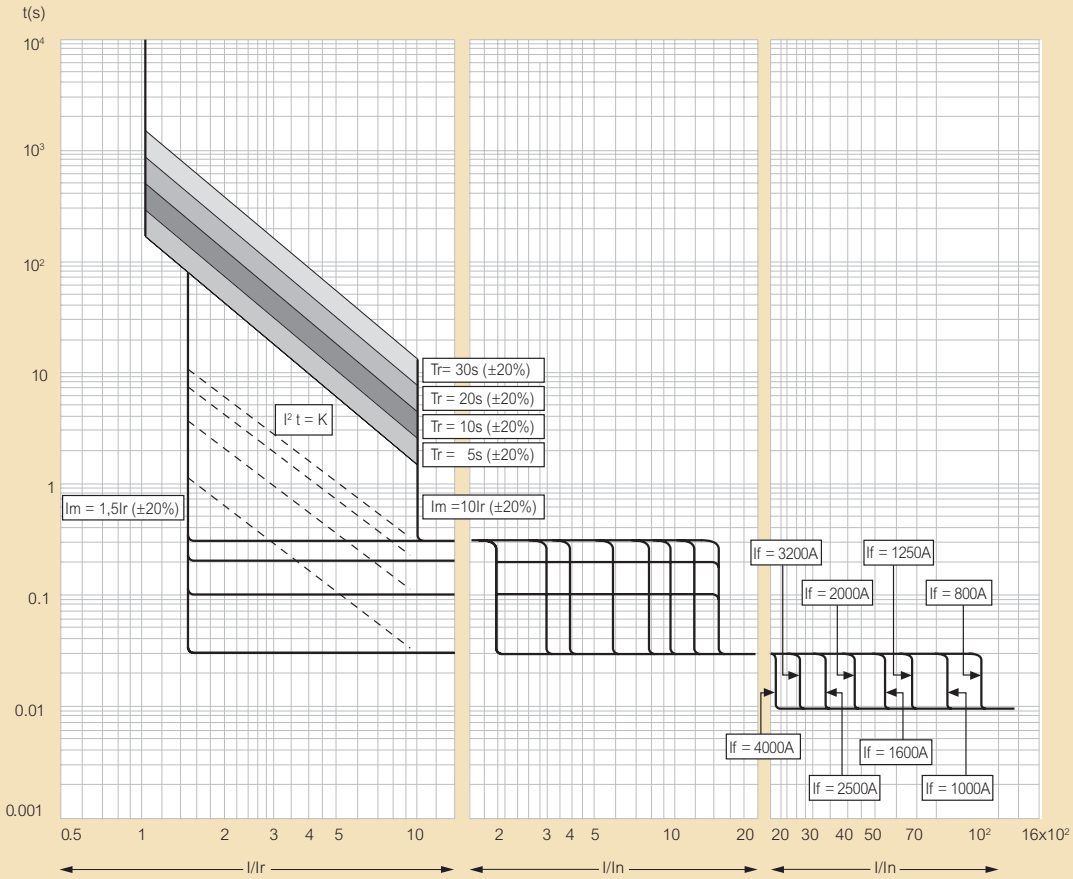


Ir = long time setting current
Tr = long time delay
Im = short time setting current
Tm = short time delay
If = istantaneous intervention current

## ■ Ground fault tripping curve for MP4 LSIg protection unit

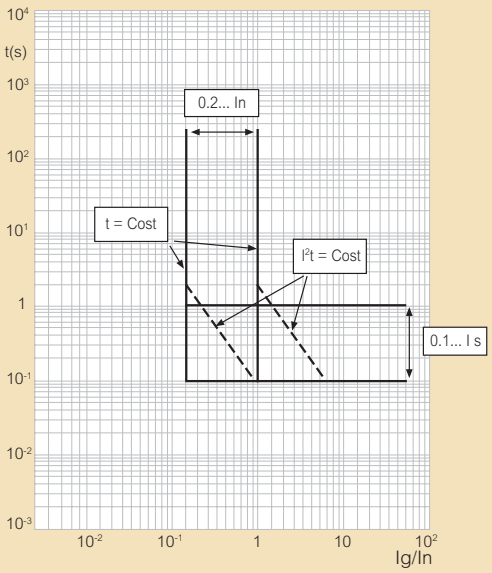


## ■ Pass-through specific energy characteristic

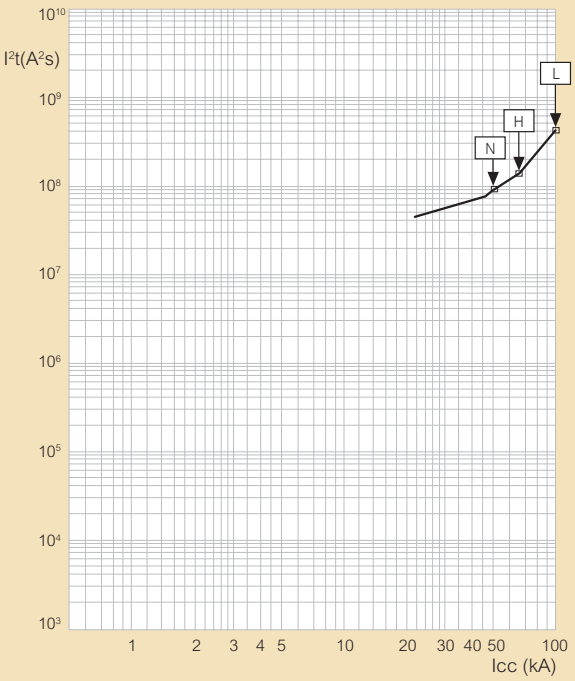

# DMX³ 2500 and 4000
technical characteristics

## ■ Technical characteristics

### DMX³ 2500

| DMX³ acording to IEC 60947-2 | | DMX³ 2500 | | | | | | | | | | | | | | | | | |
|---|---|---|---|---|---|---|---|---|---|---|---|---|---|---|---|---|---|---|---|
| | | 800 | | | 1000 | | | 1250 | | | 1600 | | | 2000 | | | 2500 | | |
| | | N | H | L | N | H | L | N | H | L | N | H | L | N | H | L | N | H | L |
| Number of poles | | 3P - 4P | | | 3P - 4P | | | 3P - 4P | | | 3P - 4P | | | 3P - 4P | | | 3P - 4P | | |
| Rating In (A) | | 800 | | | 1000 | | | 1250 | | | 1600 | | | 2000 | | | 2500 | | |
| Rated insulation voltage Ui (V) | | 1000 | | | 1000 | | | 1000 | | | 1000 | | | 1000 | | | 1000 | | |
| Rated impulse withstand voltage Uimp (kV) | | 12 | | | 12 | | | 12 | | | 12 | | | 12 | | | 12 | | |
| Rated operational voltage (50/60Hz) Ue (V) | | 690 | | | 690 | | | 690 | | | 690 | | | 690 | | | 690 | | |
| Frame | | 1 | | 2 | 1 | | 2 | 1 | | 2 | 1 | | 2 | 1 | | 2 | 1 | | 2 |
| Ultimate breaking capacity Icu (kA) | 230 V~ | 50 | 65 | 100 | 50 | 65 | 100 | 50 | 65 | 100 | 50 | 65 | 100 | 50 | 65 | 100 | 50 | 65 | 100 |
| | 415 V~ | 50 | 65 | 100 | 50 | 65 | 100 | 50 | 65 | 100 | 50 | 65 | 100 | 50 | 65 | 100 | 50 | 65 | 100 |
| | 500 V~ | 50 | 65 | 100 | 50 | 65 | 100 | 50 | 65 | 100 | 50 | 65 | 100 | 50 | 65 | 100 | 50 | 65 | 100 |
| | 600 V~ | 50 | 60 | 75 | 50 | 60 | 75 | 50 | 60 | 75 | 50 | 60 | 75 | 50 | 60 | 75 | 50 | 60 | 75 |
| | 690 V~ | 50 | 55 | 65 | 50 | 55 | 65 | 50 | 55 | 65 | 50 | 55 | 65 | 50 | 55 | 65 | 50 | 55 | 65 |
| Service breaking capacity Ics (% Icu) | | 100 | 100 | 100 | 100 | 100 | 100 | 100 | 100 | 100 | 100 | 100 | 100 | 100 | 100 | 100 | 100 | 100 | 100 |
| Short-circuit making capacity Icm (kA) | 230 V~ | 105 | 143 | 220 | 105 | 143 | 220 | 105 | 143 | 220 | 105 | 143 | 220 | 105 | 143 | 220 | 105 | 143 | 220 |
| | 415 V~ | 105 | 143 | 220 | 105 | 143 | 220 | 105 | 143 | 220 | 105 | 143 | 220 | 105 | 143 | 220 | 105 | 143 | 220 |
| | 500 V~ | 105 | 143 | 220 | 105 | 143 | 220 | 105 | 143 | 220 | 105 | 143 | 220 | 105 | 143 | 220 | 105 | 143 | 220 |
| | 600 V~ | 105 | 132 | 165 | 105 | 132 | 165 | 105 | 132 | 165 | 105 | 132 | 165 | 105 | 132 | 165 | 105 | 132 | 165 |
| | 690 V~ | 105 | 121 | 143 | 105 | 121 | 143 | 105 | 121 | 143 | 105 | 121 | 143 | 105 | 121 | 143 | 105 | 121 | 143 |
| Short time withstand current Icw (kA) for t = 1s | 230 V~ | 50 | 65 | 85 | 50 | 65 | 85 | 50 | 65 | 85 | 50 | 65 | 85 | 50 | 65 | 85 | 50 | 65 | 85 |
| | 415 V~ | 50 | 65 | 85 | 50 | 65 | 85 | 50 | 65 | 85 | 50 | 65 | 85 | 50 | 65 | 85 | 50 | 65 | 85 |
| | 500 V~ | 50 | 65 | 85 | 50 | 65 | 85 | 50 | 65 | 85 | 50 | 65 | 85 | 50 | 65 | 85 | 50 | 65 | 85 |
| | 600 V~ | 50 | 60 | 75 | 50 | 60 | 75 | 50 | 60 | 75 | 50 | 60 | 75 | 50 | 60 | 75 | 50 | 60 | 75 |
| | 690 V~ | 50 | 55 | 65 | 50 | 55 | 65 | 50 | 55 | 65 | 50 | 55 | 65 | 50 | 55 | 65 | 50 | 55 | 65 |
| Category of use | | B | | | B | | | B | | | B | | | B | | | B | | |
| Isolation behavior | | YES | | | YES | | | YES | | | YES | | | YES | | | YES | | |
| Endurance (cycles) | mechanical | 10000 | | | 10000 | | | 10000 | | | 10000 | | | 10000 | | | 10000 | | |
| | electrical | 5000 | | | 5000 | | | 5000 | | | 5000 | | | 5000 | | | 5000 | | |

### DMX³ 4000

| DMX³ acording to IEC 60947-2 | | DMX³ 4000 | | | | | |
|---|---|---|---|---|---|---|---|
| | | 3200 | | | 4000 | | |
| | | N | H | L | N | H | L |
| Number of poles | | 3P - 4P | | | 3P - 4P | | |
| Rating In (A) | | 3200 | | | 4000 | | |
| Rated insulation voltage Ui (V) | | 1000 | | | 1000 | | |
| Rated impulse withstand voltage Uimp (kV) | | 12 | | | 12 | | |
| Rated operational voltage (50/60Hz) Ue (V) | | 690 | | | 690 | | |
| Frame | | 2 | | | 2 | | |
| Ultimate breaking capacity Icu (kA) | 230 V~ | 50 | 65 | 100 | 50 | 65 | 100 |
| | 415 V~ | 50 | 65 | 100 | 50 | 65 | 100 |
| | 500 V~ | 50 | 65 | 100 | 50 | 65 | 100 |
| | 600 V~ | 50 | 60 | 75 | 50 | 60 | 75 |
| | 690 V~ | 50 | 55 | 65 | 50 | 55 | 65 |
| Service breaking capacity Ics (% Icu) | | 100 | 100 | 100 | 100 | 100 | 100 |
| Short-circuit making capacity Icm (kA) | 230 V~ | 105 | 143 | 220 | 105 | 143 | 220 |
| | 415 V~ | 105 | 143 | 220 | 105 | 143 | 220 |
| | 500 V~ | 105 | 143 | 220 | 105 | 143 | 220 |
| | 600 V~ | 105 | 132 | 165 | 105 | 132 | 165 |
| | 690 V~ | 105 | 121 | 143 | 105 | 121 | 143 |
| Short time withstand current Icw (kA) for t = 1s | 230 V~ | 50 | 65 | 85 | 50 | 65 | 85 |
| | 415 V~ | 50 | 65 | 85 | 50 | 65 | 85 |
| | 500 V~ | 50 | 65 | 85 | 50 | 65 | 85 |
| | 600 V~ | 50 | 60 | 75 | 50 | 60 | 75 |
| | 690 V~ | 50 | 55 | 65 | 50 | 55 | 65 |
| Category of use | | B | | | B | | |
| Isolation behavior | | YES | | | YES | | |
| Endurance (cycles) | mechanical | 10000 | | | 10000 | | |
| | electrical | 5000 | | | 5000 | | |

### DMX³ - I 2500 and 4000

| DMX³ - I acording to IEC 60947-3 | | DMX³-I 2500 | | | | DMX³-I 4000 | |
|---|---|---|---|---|---|---|---|
| | | 1250 | 1600 | 2000 | 2500 | 3200 | 4000 |
| Number of poles | | 3P - 4P | 3P - 4P | 3P - 4P | 3P - 4P | 3P - 4P | 3P - 4P |
| Rating In (A) | | 1250 | 1600 | 2000 | 2500 | 3200 | 4000 |
| Rated insulation voltage Ui (V) | | 1000 | 1000 | 1000 | 1000 | 1000 | 1000 |
| Rated impulse withstand voltage Uimp (kV) | | 12 | 12 | 12 | 12 | 12 | 12 |
| Rated operational voltage (50/60Hz) Ue (V) | | 690 | 690 | 690 | 690 | 690 | 690 |
| Frame | | 1 | 1 | 1 | 1 | 2 | 2 |
| Short-circuit making capacity Icm (kA) | 230 V~ | 105 | 105 | 105 | 105 | 105 | 105 |
| | 415 V~ | 105 | 105 | 105 | 105 | 105 | 105 |
| | 500 V~ | 105 | 105 | 105 | 105 | 105 | 105 |
| | 600 V~ | 88 | 88 | 88 | 88 | 88 | 88 |
| | 690 V~ | 63 | 63 | 63 | 63 | 63 | 63 |
| Short time withstand current Icw (kA) for t = 1s | 230 V~ | 50 | 50 | 50 | 50 | 50 | 50 |
| | 415 V~ | 50 | 50 | 50 | 50 | 50 | 50 |
| | 500 V~ | 50 | 50 | 50 | 50 | 50 | 50 |
| | 600 V~ | 42 | 42 | 42 | 42 | 42 | 42 |
| | 690 V~ | 36 | 36 | 36 | 36 | 36 | 36 |
| Isolation behavior | | YES | YES | YES | YES | YES | YES |
| Endurance (cycles) | mechanical | 10000 | 10000 | 10000 | 10000 | 10000 | 10000 |
| | electrical | 5000 | 5000 | 5000 | 5000 | 5000 | 5000 |

## ■ Temperature derating

### Fixed version

| Temperature | 40°C | | 50°C | | 60°C | | 65°C | | 70°C | |
|---|---|---|---|---|---|---|---|---|---|---|
| | Imax (A) | Ir / In | Imax (A) | Ir / In | Imax (A) | Ir / In | Imax (A) | Ir / In | Imax (A) | Ir / In |
| DMX³ 2500 | 800 | 1 | 800 | 1 | 800 | 1 | 800 | 1 | 800 | 1 |
| | 1000 | 1 | 1000 | 1 | 1000 | 1 | 1000 | 1 | 1000 | 1 |
| | 1250 | 1 | 1250 | 1 | 1250 | 1 | 1250 | 1 | 1250 | 1 |
| | 1600 | 1 | 1600 | 1 | 1600 | 1 | 1600 | 1 | 1600 | 1 |
| | 2000 | 1 | 2000 | 1 | 1960 | 0.98 | 1920 | 0.96 | 1880 | 0.94 |
| | 2500 | 1 | 2450 | 0.98 | 2350 | 0.94 | 2250 | 0.9 | 2150 | 0.86 |
| DMX³ 4000 | 3200 | 1 | 3200 | 1 | 3200 | 1 | 3136 | 0.98 | 3008 | 0.94 |
| | 4000 | 1 | 3920 | 0.98 | 3680 | 0.92 | 3440 | 0.86 | 3120 | 0.78 |

### Draw-out version

| Temperature | 40°C | | 50°C | | 60°C | | 65°C | | 70°C | |
|---|---|---|---|---|---|---|---|---|---|---|
| | Imax (A) | Ir / In | Imax (A) | Ir / In | Imax (A) | Ir / In | Imax (A) | Ir / In | Imax (A) | Ir / In |
| DMX³ 2500 | 800 | 1 | 800 | 1 | 800 | 1 | 800 | 1 | 800 | 1 |
| | 1000 | 1 | 1000 | 1 | 1000 | 1 | 1000 | 1 | 1000 | 1 |
| | 1250 | 1 | 1250 | 1 | 1250 | 1 | 1250 | 1 | 1250 | 1 |
| | 1600 | 1 | 1600 | 1 | 1600 | 1 | 1600 | 1 | 1600 | 1 |
| | 2000 | 1 | 2000 | 1 | 1960 | 0.98 | 1920 | 0.96 | 1875 | 0.94 |
| | 2500 | 1 | 2400 | 0.96 | 2250 | 0.9 | 2100 | 0.84 | 1950 | 0.78 |
| DMX³ 4000 | 3200 | 1 | 3200 | 1 | 3200 | 1 | 3072 | 0.96 | 2880 | 0.9 |
| | 4000 | 1 | 3760 | 0.94 | 3440 | 0.86 | 3200 | 0.8 | 2960 | 0.74 |

## ■ Derating at different altitudes

| Air circuit breaker | DMX³ 2500 and DMX³ 4000 | | | |
|---|---|---|---|---|
| Altitude H (m) | < 2000 | 3000 | 4000 | 5000 |
| Rated current (at 40°C) In (A) | In | 0.98 x In | 0.94 x In | 0.90 x In |
| Rated voltage Ue (V) | 690 | 600 | 500 | 440 |
| Rated insulation voltage Ui (V) | 1000 | 900 | 750 | 600 |

## ■ Minimum recommended dimension of busbars per pole

| In (A) | Vertical bars (mm) | Horizontal bars (mm) |
|---|---|---|
| 630 | 50 x 10 | 60 x 10 |
| 800 | 60 x 10 | 60 x 10 |
| 1000 | 80 x 10 | 80 x 10 |
| 1250 | 80 x 10 | 2 x 60 x 10 |
| 1600 | 2 x 60 x 10 | 2 x 80 x 10 |
| 2000 | 2 x 80 x 10 | 3 x 80 x 10 |
| 2500 | 3 x 80 x 10 | 3 x 80 x 10 |
| 3200 | 3 x 100 x 10 | 3 x 100 x 10 |
| 4000 | 4 x 100 x 10 | 5 x 100 x 10 |

Note: The tables presenting the minimum recommended dimensions of connection plates and bars per pole should be used solely as a general guideline for selecting products. Due to extensive variety of switchgear constructions shapes and conditions that can affect the behavior of the apparatus, the solution used must always be verified

**World Headquarters**
**and International Department**
**87045 LIMOGES CEDEX**
**FRANCE**

Tel. : + 33 5 55 06 87 87
Fax : + 33 5 55 06 75 75

**www.legrandgroup.com**

EX29050